Gate Driver Providing Galvanic isolation Series

Isolation voltage 2500Vrms
1ch Gate Driver Providing Galvanic Isolation

BM6101FV-C

●General Description

The BM6101FV-C is a gate driver with isolation voltage 2500Vrms, I/O delay time of 350ns, and minimum input pulse width of 180ns, and incorporates the fault signal output functions, undervoltage lockout (UVLO) function, thermal protection function, and short current protection (SCP, DESAT) function.

●Features

- Providing Galvanic Isolation
- Active Miller Clamping
- Fault signal output function (Adjustable output holding time)
- Undervoltage lockout function
- Thermal protection function
- Short current protection function (Adjustable reset time)
- Soft turn-off function for short current protection (Adjustable turn-off time)
- Supporting Negative VEE
- UL1577 Recognized:File No. E356010
- AEC-Q100 Qualified(Note 1) (Note 1:Grade1)

●Key Specifications

- Isolation voltage: 2500Vrms(Max.)
- Maximum gate drive voltage: 24V(Max.)
- I/O delay time: 350ns(Max.)
- Minimum input pulse width: 180ns(Max.)

●Package

	W(Typ.) x D(Typ.) x H(Max.)
SSOP-B20W	6.50mm x 8.10mm x 2.01mm

●Applications

- Automotive isolated IGBT/MOSFET inverter gate drive
- Automotive DC-DC converter
- Industrial inverters system
- UPS system

●Typical Application Circuits

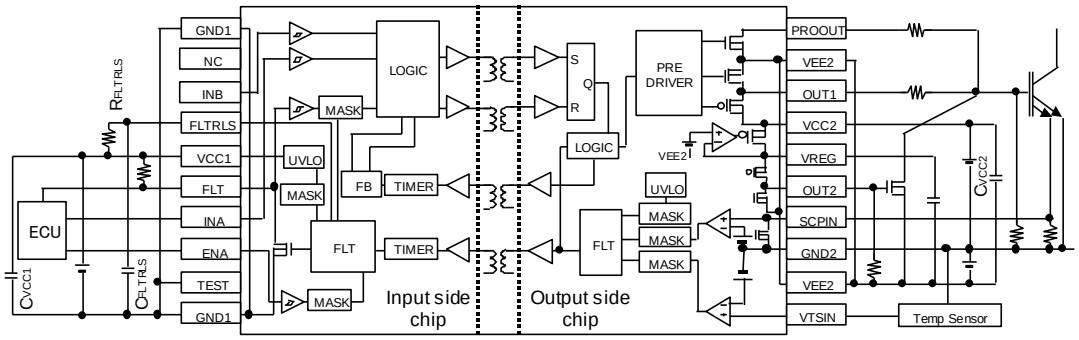

Figure 1. For using 4-pin IGBT (for using SCP function)

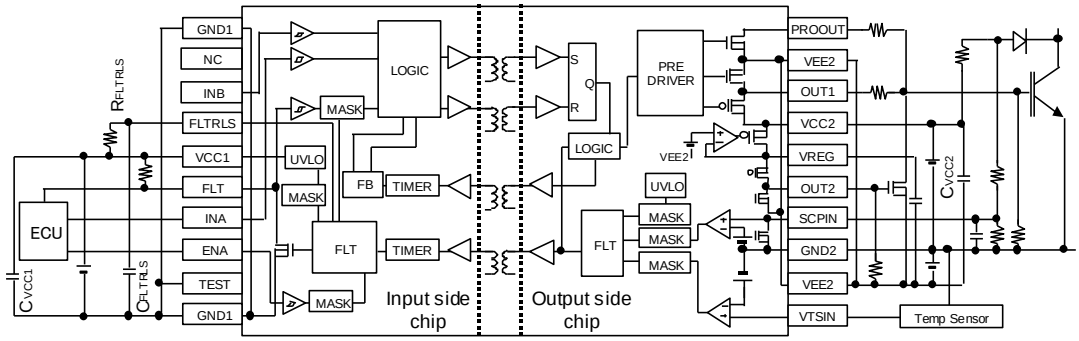

Figure 2. For using 3-pin IGBT (for using DESAT function)

○Product structure : Silicon integrated circuit ○This product is not designed protection against radioactive rays

© 2013 ROHM Co., Ltd. All rights reserved.

●Recommended range of external constants

Pin Name	Symbol	Recommended Value			Unit
		Min.	Typ.	Max.	
FLTRLS	C_{FLTRLS}	-	0.01	0.47	uF
	R_{FLTRLS}	50	200	1000	kΩ
VREG	C_{VREG}	1.0	3.3	10.0	uF
VCC1	C_{VCC1}	0.1	1.0	-	uF
VCC2	C_{VCC2}	0.33	-	-	uF

●Pin Configuration

SSOP-B20W
(TOP VIEW)

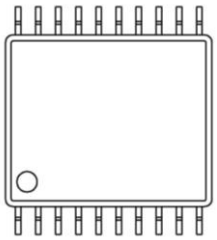

1pin

Figure 3. Pin configuration

●Pin Description

Pin No.	Pin Name	Function
1	VTSIN	Thermal detection pin
2	VEE2	Output-side negative power supply pin
3	GND2	Output-side ground pin
4	SCPIN	Short current detection pin
5	OUT2	MOS FET control pin for Miller Clamp
6	VREG	Power supply pin for driving MOS FET for Miller Clamp
7	VCC2	Output-side positive power supply pin
8	OUT1	Output pin
9	VEE2	Output-side negative power supply pin
10	PROOUT	Soft turn-off pin
11	GND1	Input-side ground pin
12	NC	No Connect
13	INB	Invert / non-invert selection pin
14	FLTRLS	Fault output holding time setting pin
15	VCC1	Input-side power supply pin
16	FLT	Fault output pin
17	INA	Control input pin
18	ENA	Input enabling signal input pin
19	TEST	Mode setting pin
20	GND1	Input-side ground pin

© 2013 ROHM Co., Ltd. All rights reserved.

●Description of pins and cautions on layout of board

1) VCC1 (Input-side power supply pin)
The VCC1 pin is a power supply pin on the input side. To suppress voltage fluctuations due to the current to drive internal transformers, connect a bypass capacitor between the VCC1 and the GND1 pins.

2) GND1 (Input-side ground pin)
The GND1 pin is a ground pin on the input side.

3) VCC2 (Output-side positive power supply pin)
The VCC2 pin is a positive power supply pin on the output side. To reduce voltage fluctuations due to OUT1 pin output current and due to the current to drive internal transformers, connect a bypass capacitor between the VCC2 and the GND2 pins.

4) VEE2 (Output-side negative power supply pin)
The VEE2 pin is a power supply pin on the output side. To suppress voltage fluctuations due to OUT1 pin output current and due to the current to drive internal transformers, connect a bypass capacitor between the VEE2 and the GND2 pins. To use no negative power supply, connect the VEE2 pin to the GND2 pin.

5) GND2 (Output-side ground pin)
The GND2 pin is a ground pin on the output side. Connect the GND2 pin to the emitter / source of a power device.

6) IN (Control input terminal)
The IN pin is a pin used to determine output logic.

ENA	INB	INA	OUT1
H	X	X	L
L	L	L	L
L	L	H	H
L	H	L	H
L	H	H	L

7) FLT (Fault output pin)
The FLT pin is an open drain pin used to output a fault signal when a fault occurs (i.e., when the undervoltage lockout function (UVLO), short current protection function (SCP) or thermal protection function is activated).
This pin is I/O pin and if L voltage is externally input, the output is set to L status regardless of other input logic. Consequently, be sure to connect the pull-up resistor between VCC1 pin and the FLT pin even if this pin is not used.

Pin	FLT
While in normal operation	Hi-Z
When an Fault occurs (When UVLO, SCP or thermal protection is activated)	L

8) FLTRLS (Fault output holding time setting pin)
The FLTRLS pin is a pin used to make setting of time to hold a Fault signal. Connect a capacitor between the FLTRLS pin and the GND1 pin, and a resistor between it and the VCC1 pin.
The Fault signal is held until the FLTRLS pin voltage exceeds a voltage set with the V_{FLTRLS} parameter. To set holding time to 0 ms, do not connect the capacitor. Short-circuiting the FLTRLS pin to the VCC1 pin will cause a high current to flow in the FLTRLS pin and, in an open state, may cause the IC to malfunction. To avoid such trouble, be sure to connect a resistor between the FLTRLS and the VCC1 pins.

9) OUT1 (Output pin)
The OUT1 pin is a pin used to drive the gate of a power device.

10) OUT2 (MOS FET control pin for Miller Clamp)
The OUT2 pin is a pin for controlling the external MOS switch for preventing increase in gate voltage due to the miller current of the power device connected to OUT1 pin.

11) VREG (Power supply pin for driving MOS FET for Miller Clamp)
The VREG pin is a power supply pin for driving MOS FET for Miller Clamp. Be sure to connect a capacitor between VREG pin and VEE2 pin for preventing the oscillation and to reduce voltage fluctuations due to OUT2 pin output current.

12) PROOUT (Soft turn-off pin)
The PROOUT pin is a pin used to put the soft turn-off function of a power devise in operation when the SCP function is activated. This pin combines with the gate voltage monitoring pin for Miller Clamp.

13) SCPIN (Short current detection pin)
The SCPIN pin is a pin used to detect current for short current protection. When the SCPIN pin voltage exceeds a voltage set with the V_{SCDET} parameter, the SCP function will be activated. This may cause the IC to malfunction in an open state. To avoid such trouble, short-circuit the SCPIN pin to the GND2 pin if the short current protection is not used. In order to prevent the wrong detection due to noise, the noise mask time t_{SCPMSK} is set.

© 2013 ROHM Co., Ltd. All rights reserved.

14) VTSIN (Thermal detection pin)

The VTSIN pin is a temperature sensor voltage input pin, which can be used for thermal protection of an output device. If VTSIN pin voltage becomes V_{TSDET} or less, OUT pin is set to L. In the open status, the IC may malfunction, so be sure to supply the VTSPIN more than V_{TSDET} if the thermal protection function is not used. In order to prevent the wrong detection due to noise, the noise mask time t_{TSMSK} is set.

15) TEST(Mode setting pin)

The TEST pin is an operation mode setting pin. This pin is usually connected to GND1 pin. If the TEST pin is connected to the VCC1 pin, Input-side UVLO function is disabled.

●Description of functions and examples of constant setting

1) Miller Clamp function

When OUT1=L and PROOUT pin voltage < V_{OUT2ON}, H is output from OUT2 pin and the external MOS switch is turned ON. When OUT1=H, L is output from OUT2 pin and the external MOS switch is turned OFF. While the short-circuit protection function is activated, L is output from OUT2 pin and the external MOS switch is turned OFF.

Short current	SCPIN	IN	PROOUT	OUT2
Detected	Not less than V_{SCDET}	X	X	L
Not detected	X	L	Not less than V_{OUT2ON}	Hi-Z
	X	L	Not more than V_{OUT2ON}	H
	X	H	X	L

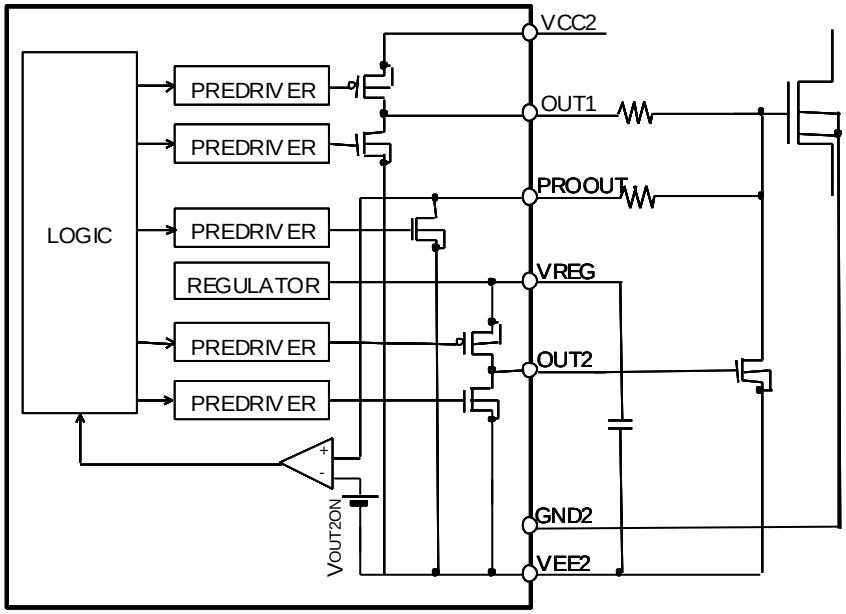

Figure 4. Block diagram of Miller Clamp function

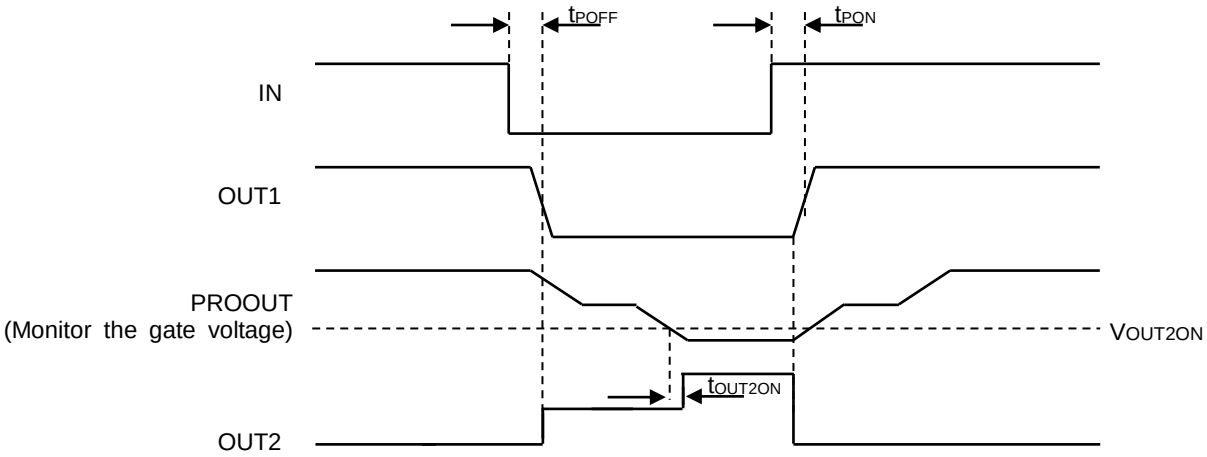

Figure 5. Timing chart of Miller Clamp function

© 2013 ROHM Co., Ltd. All rights reserved.

2) Fault status output

This function is used to output a fault signal from the FLT pin when a fault occurs (i.e., when the undervoltage lockout function (UVLO), short current protection function (SCP) or thermal protection function is activated) and hold the Fault signal until the set Fault output holding time is completed. The Fault output holding time t_{FLTRLS} is given as the following equation with the settings of capacitor C_{FLTRLS} and resistor R_{FLTRLS} connected to the FLTRLS pin. For example, when C_{FLTRLS} is set to 0.01μF and R_{FLTRLS} is set to 200kΩ, the holding time will be set to 2 ms.

t_{FLTRLS} [ms]= C_{FLTRLS} [μF]•R_{FLTRLS} [kΩ]

To set the fault output holding time to "0" ms, only connect the resistor R_{FLTRLS}.

Status	FLT pin
Normal	Hi-Z
Fault occurs	L

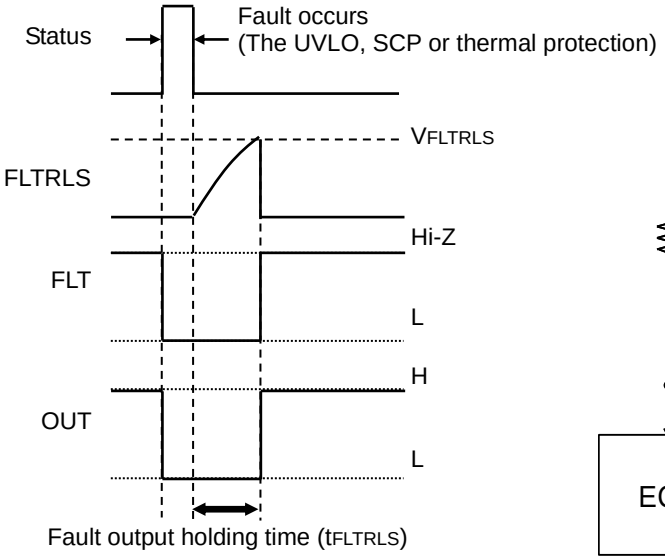

Figure 6. Fault Status Output Timing Chart

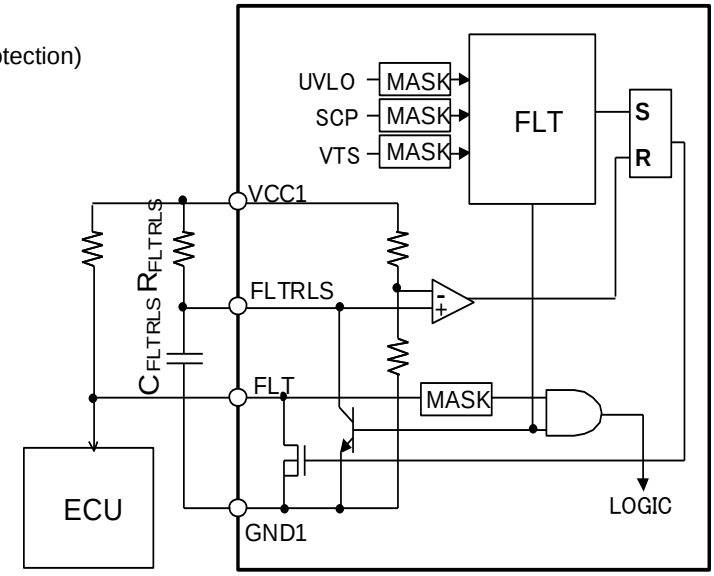

Figure 7. Fault Output Block Diagram

3) Undervoltage Lockout (UVLO) function

The BM6101FV-C incorporates the undervoltage lockout (UVLO) function both on the low and the high voltage sides. When the power supply voltage drops to the UVLO ON voltage, the OUT pin and the FLT pin both will output the "L" signal. When the power supply voltage rises to the UVLO OFF voltage, these pins will be reset. However, during the fault output holding time set in "2) Fault status output" section, the OUT pin and the FLT pin will hold the "L" signal. In addition, to prevent malfunctions due to noises, mask time $t_{UVLO1MSK}$ and $t_{UVLO2MSK}$ are set on both low and high voltage sides.

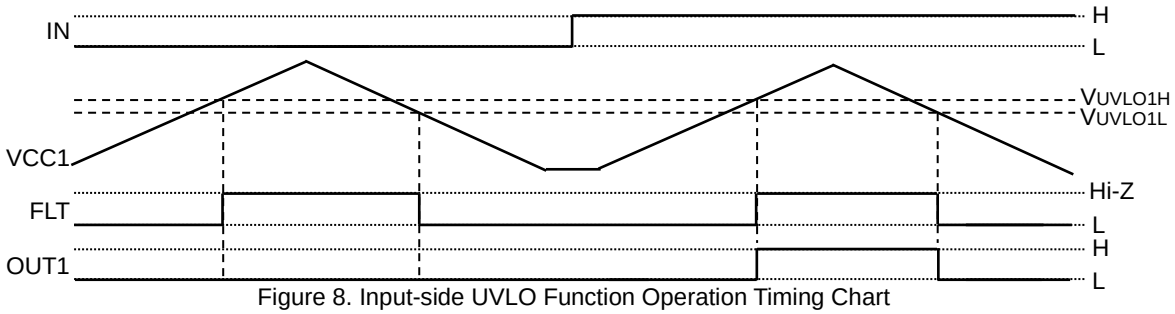

Figure 8. Input-side UVLO Function Operation Timing Chart

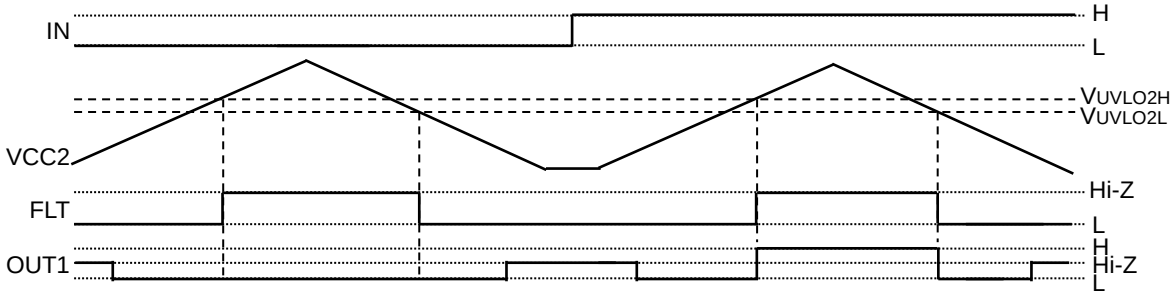

Figure 9. Output-side UVLO Operation Timing Chart

© 2013 ROHM Co., Ltd. All rights reserved.

4) Short current protection function (SCP, DESAT)

When the SCPIN pin voltage exceeds a voltage set with the V_{SCDET} parameter, the SCP function will be activated. When the SCP function is activated, the OUT1 pin voltage will be set to the “Hi-Z” level first, and then the PROOUT pin voltage to the “L” level (soft turn-off).Next, after t_{STO} has passed after the short-circuit current falls below the threshold value, OUT pin becomes L and PROOUT pin becomes L. Finally, when the fault output holding time set in “2) fault status output” section on page 5 is completed, the SCP function will be released.

When OUT1=L or Hi-Z, internal MOSFET connected to SCPIN pin turns ON to discharge C_{BLANK}. When OUT1=H, internal MOSFET connected to SCPIN turns OFF.

$V_{COLLECTOR}/V_{DRAIN}$ which Desaturation Protection starts operation (V_{DESAT}) and the blanking time (t_{BLANK}) can be calculated by the formula below;

$$V_{DESAT}[V] = V_{SCDET} \bullet \frac{R3+R2}{R3} - V_{F_D}$$

$$V_{CC2_{MIN}}[V] > V_{SCDET} \bullet \frac{R3+R2+R1}{R3}$$

$$t_{BLANK\text{outemal}}[s] = -\frac{R2+R1}{R3+R2+R1} \bullet R3 \bullet (C_{BLANK} + 27 \bullet 10^{-12}) \bullet \ln(1 - \frac{R3+R2+R1}{R3} \bullet \frac{V_{SCDET}}{V_{CC2}}) + 0.65 \bullet 10^{-6}$$

V_{DESAT}	Reference Value		
	R1	R2	R3
4.0V	15 kΩ	39 kΩ	6.8 kΩ
4.5V	15 kΩ	43 kΩ	6.8 kΩ
5.0V	15 kΩ	36 kΩ	5.1 kΩ
5.5V	15 kΩ	39 kΩ	5.1 kΩ
6.0V	15 kΩ	43 kΩ	5.1 kΩ
6.5V	15 kΩ	62 kΩ	6.8 kΩ
7.0V	15 kΩ	68 kΩ	6.8 kΩ
7.5V	15 kΩ	82 kΩ	7.5 kΩ
8.0V	15 kΩ	91 kΩ	8.2 kΩ
8.5V	15 kΩ	82 kΩ	6.8 kΩ
9.0V	15 kΩ	130 kΩ	10 kΩ
9.5V	15 kΩ	91 kΩ	6.8 kΩ
10.0V	15 kΩ	130 kΩ	9.1 kΩ

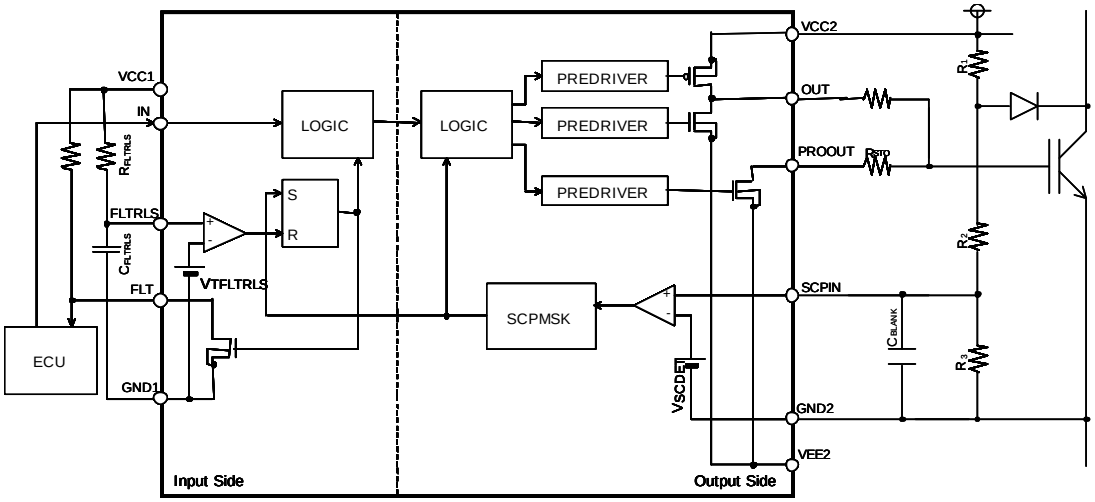

Figure 10. Block Diagram for DESAT

© 2013 ROHM Co., Ltd. All rights reserved.

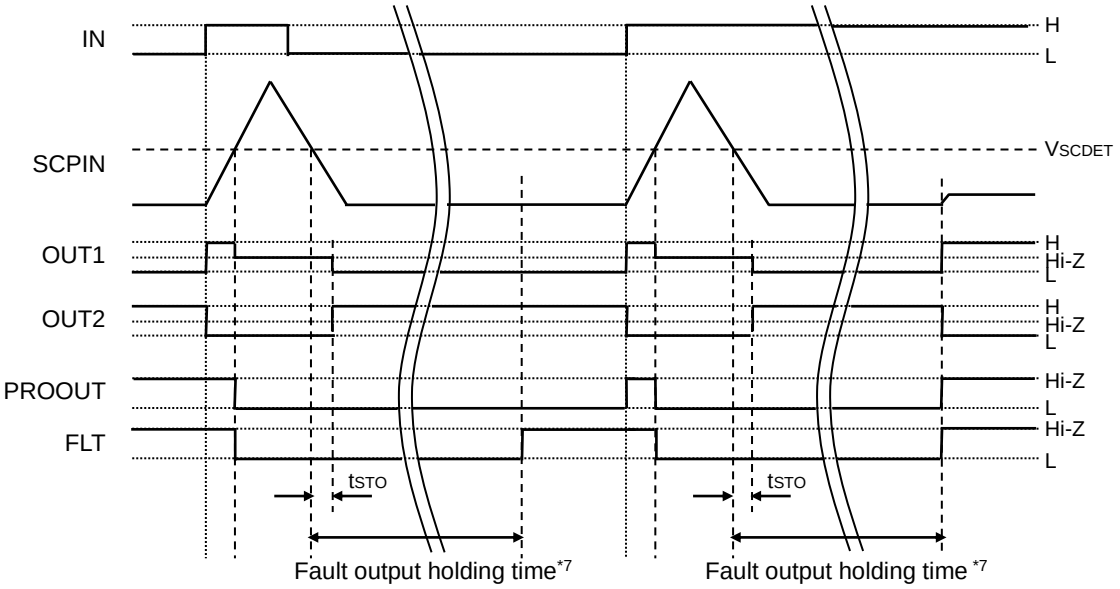

*7: “2) Fault status output” section on page 5

Figure 11. SCP Operation Timing Chart

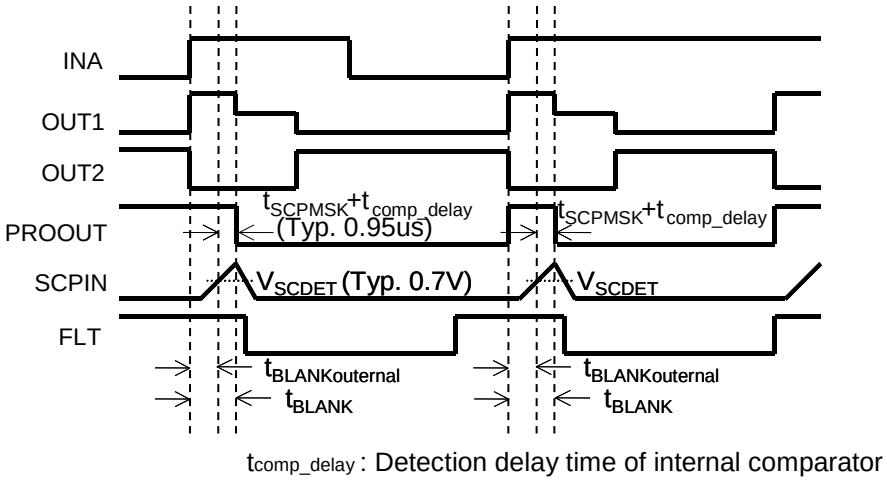

Figure 12. DESAT sequence

© 2013 ROHM Co., Ltd. All rights reserved.

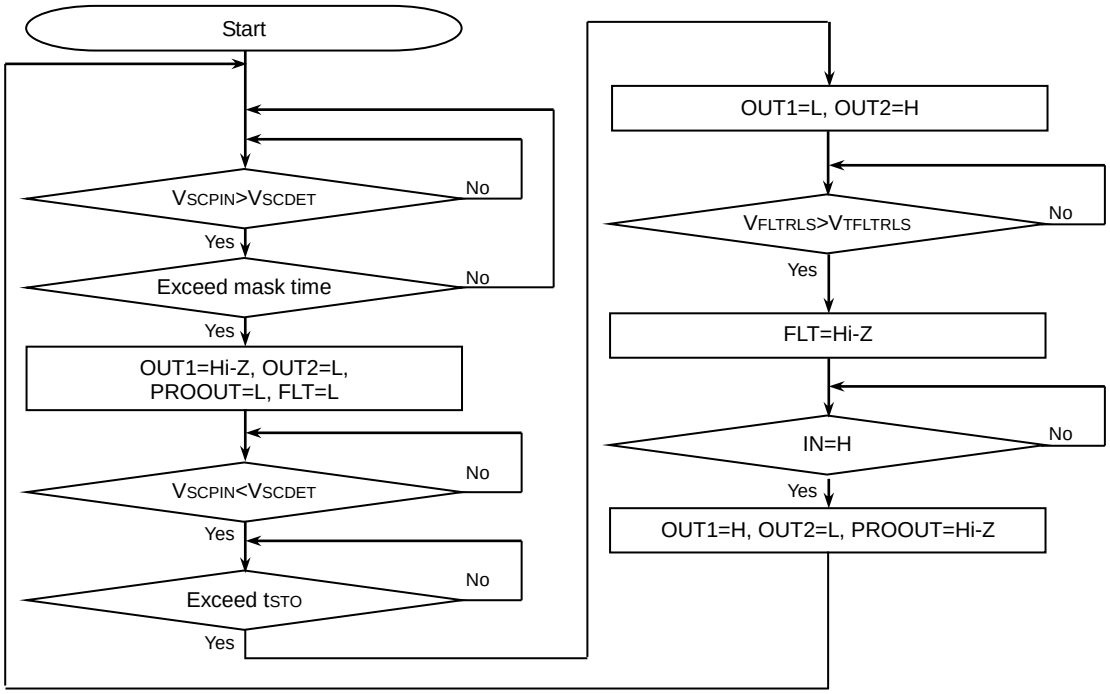

Figure 13. SCP Operation Status Transition Diagram

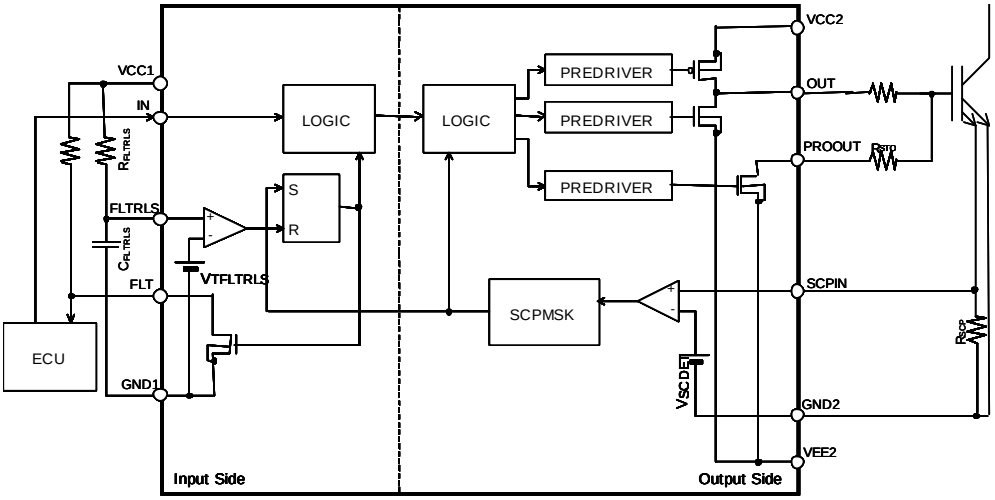

Figure 14. Block Diagram for SCP

© 2013 ROHM Co., Ltd. All rights reserved.

5）I/O condition table

No.	Status	Input									Output			
		VCC1	VCC2	VTSIN	SCPIN	FLT	ENA	INB	INA	PROOUT	OUT1	OUT2	PROOUT	FLT
1	SCP	X	X	X	H	X	X	X	X	X	Hi-Z	L	L	L
2	VCC1UVLO	UVLO	X	X	L	X	X	X	X	H	L	Hi-Z	Hi-Z	L
3		UVLO	X	X	L	X	X	X	X	L	L	H	Hi-Z	L
4	VCC2UVLO	X	UVLO	X	L	X	X	X	X	H	L	Hi-Z	Hi-Z	L
5		X	UVLO	X	L	X	X	X	X	L	L	H	Hi-Z	L
6	Thermal protection	○	○	L	L	X	X	X	X	H	L	Hi-Z	Hi-Z	L
7		○	○	L	L	X	X	X	X	L	L	H	Hi-Z	L
8	FLT external input	○	○	H	L	L	X	X	X	H	L	Hi-Z	Hi-Z	Hi-Z
9		○	○	H	L	L	X	X	X	L	L	H	Hi-Z	Hi-Z
10	Disable	○	○	H	L	H	H	X	X	H	L	Hi-Z	Hi-Z	Hi-Z
11		○	○	H	L	H	H	X	X	L	L	H	Hi-Z	Hi-Z
12	Non-invert operation L input	○	○	H	L	H	L	L	L	H	L	Hi-Z	Hi-Z	Hi-Z
13		○	○	H	L	H	L	L	L	L	L	H	Hi-Z	Hi-Z
14	Non-invert operation H input	○	○	H	L	H	L	L	H	X	H	L	Hi-Z	Hi-Z
15	Invert operation L input	○	○	H	L	H	L	H	L	X	H	L	Hi-Z	Hi-Z
16	Invert operation H input	○	○	H	L	H	L	H	H	H	L	Hi-Z	Hi-Z	Hi-Z
17		○	○	H	L	H	L	H	H	L	L	H	Hi-Z	Hi-Z

○: VCC1 or VCC2 > UVLO, X:Don't care

© 2013 ROHM Co., Ltd. All rights reserved.

6) Power supply startup / shutoff sequence

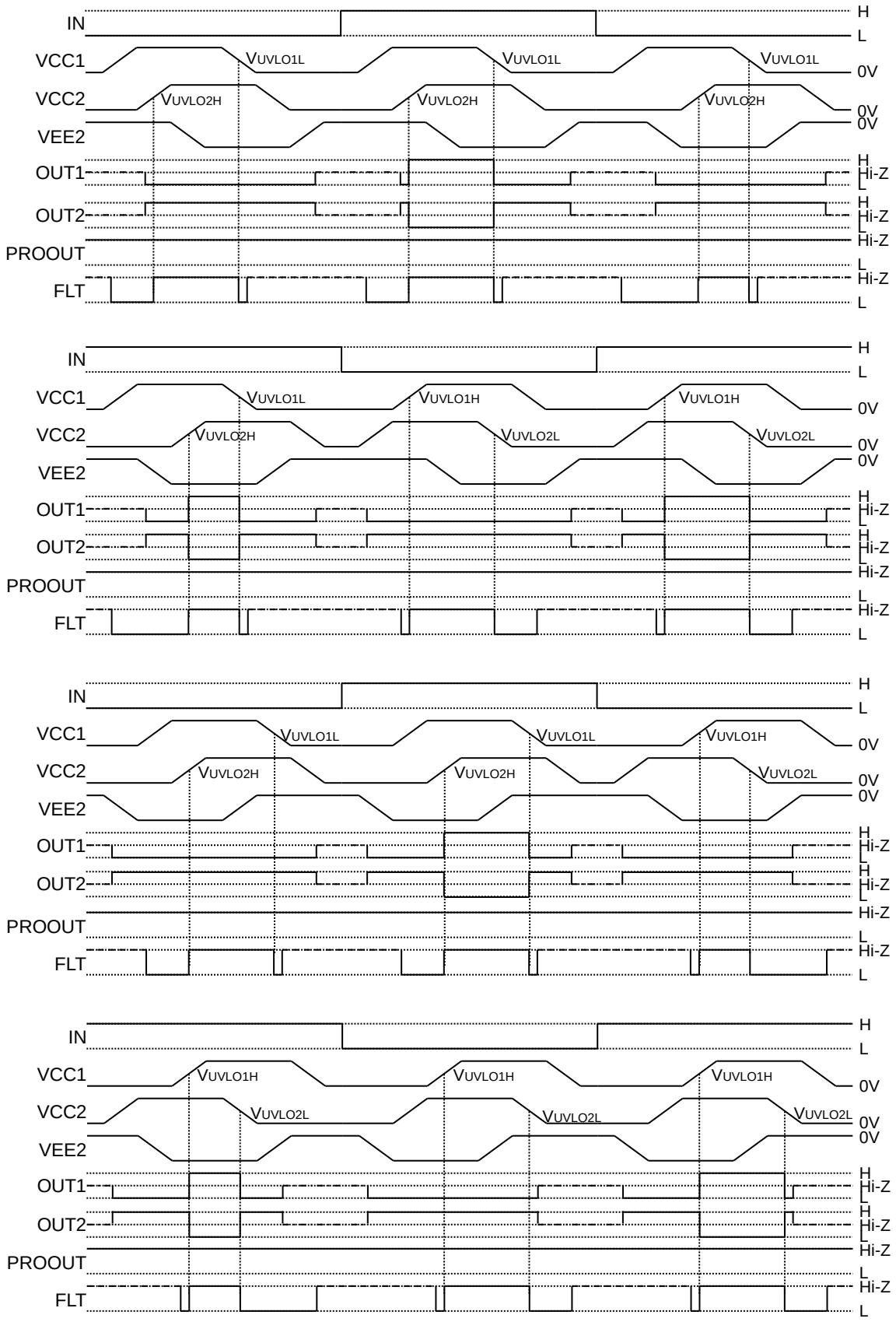

-·-·-·-·- : Since the VCC2 to VEE2 pin voltage is low and the output MOS does not turn ON, the output pins become Hi-Z conditions.

- - - - - - - : Since the VCC1 pin voltage is low and the FLT output MOS does not turn ON, the output pins become Hi-Z conditions.

Figure 15. Power supply startup / shutoff sequence

© 2013 ROHM Co., Ltd. All rights reserved.

●Absolute Maximum Ratings

Parameter	Symbol	Limits	Unit
Input-side supply voltage	V_{CC1}	-0.3 to +7.0*1	V
Output-side positive supply voltage	V_{CC2}	-0.3 to +30.0*2	V
Output-side negative supply voltage	V_{EE2}	-15.0 to +0.3*2	V
Maximum difference between output-side positive and negative voltages	V_{MAX2}	36.0	V
INA, INB, ENA pin input voltage	V_{IN}	-0.3 to +VCC1+0.3 or 7.0*1	V
FLT pin input voltage	V_{FLT}	-0.3 to +VCC1+0.3 or 7.0*1	V
FLTRLS pin input voltage	V_{FLTRLS}	-0.3 to +VCC1+0.3 or 7.0*1	V
VTSIN pin input voltage	V_{VTSIN}	-0.3 to +10.0*2	V
SCPIN pin input voltage	V_{SCPIN}	-0.3 to +10.0*2	V
VREG pin output current	I_{VREG}	10	mA
OUT1 pin output current (DC)	I_{OUT1}	0.4*3	A
OUT1 pin output current (Peak 1us)	$I_{OUT1PEAK}$	5.0	A
OUT2 pin output current (DC)	I_{OUT2}	0.1*3	A
OUT2 pin output current (Peak 1us)	$I_{OUT2PEAK}$	1	A
PROOUT pin output current	I_{PROOUT}	0.2*3	A
FLT output current	I_{FLT}	10	mA
Power dissipation	P_d	1.19*4	W
Operating temperature range	T_{opr}	-40 to +125	℃
Storage temperature range	T_{stg}	-55 to +150	℃
Junction temperature	T_{jmax}	+150	℃

*1 Relative to GND1.
*2 Relative to GND2.
*3 Should not exceed Pd and Tj=150°C.
*4 Derate above Ta=25°C at a rate of 9.5mW/°C. Mounted on a glass epoxy of 70 mm × 70 mm × 1.6 mm.

●Recommended Operating Ratings

Parameter	Symbol	Min.	Max.	Units
Input-side supply voltage	V_{CC1}*5	4.5	5.5	V
Output-side positive supply voltage	V_{CC2}*6	14	24	V
Output-side negative supply voltage	V_{EE2}*6	-12	0	V
Maximum difference between output-side positive and negative voltages	V_{MAX2}	14	32	V
VTSIN pin input voltage	V_{VTSIN}*6	0	5	V

***5 Relative to GND1.**
***6 Relative to GND2.**

●Insulation related characteristics

Parameter	Symbol	Characteristic	Units
Insulation Resistance (V_{IO}=500V)	R_S	$>10^9$	Ω
Insulation Withstand Voltage / 1min	V_{ISO}	2500	Vrms
Insulation Test Voltage / 1sec	V_{ISO}	3000	Vrms

© 2013 ROHM Co., Ltd. All rights reserved.

●**Electrical Characteristics**

（Unless otherwise specified Ta=-40℃ to 125℃, V_{CC1}=4.5V to 5.5V, V_{CC2}=14V to 24V, V_{EE2}=-12V to 0V）

Parameter	Symbol	Min.	Typ.	Max.	Unit	Conditions
General						
Input side circuit current 1	I_{CC1}	0.20	0.45	0.70	mA	OUT=L
Input side circuit current 2	I_{CC12}	0.20	0.45	0.70	mA	OUT=H
Input side circuit current 3	I_{CC13}	1.2	2.0	2.8	mA	INA=10kHz, Duty=50%
Input side circuit current 4	I_{CC14}	2.1	3.5	4.9	mA	INA=20kHz, Duty=50%
Output side circuit current 1	I_{CC21}	1.9	3.2	4.5	mA	VCC2=14V, OUT=L
Output side circuit current 2	I_{CC22}	1.3	2.1	2.9	mA	VCC2=14V, OUT=H
Output side circuit current 3	I_{CC23}	2.1	3.5	4.9	mA	VCC2=18V, OUT=L
Output side circuit current 4	I_{CC24}	1.4	2.4	3.4	mA	VCC2=18V, OUT=H
Output side circuit current 5	I_{CC25}	2.4	4.0	5.6	mA	VCC2=24V, OUT=H
Output side circuit current 6	I_{CC26}	1.6	2.7	3.8	mA	VCC2=24V, OUT=L
Logic block						
Logic high level input voltage	V_{INH}	$0.7\times V_{CC1}$	-	V_{CC1}	V	INA, INB, ENA, FLT
Logic low level input voltage	V_{INL}	0	-	$0.3\times V_{CC1}$	V	INA, INB, ENA, FLT
Logic pull-down resistance	R_{IND}	25	50	100	kΩ	INA, INB
Logic pull-up resistance	R_{INU}	25	50	100	kΩ	ENA
Logic input mask time	t_{INMSK}	80	130	180	ns	INA, INB
ENA, FLT mask time	t_{FLTMSK}	4	10	20	μs	ENA, FLT
Output						
OUT1 ON resistance (Source)	R_{ONH}	0.7	1.8	4.0	Ω	I_{OUT}=40mA
OUT1 ON resistance (Sink)	R_{ONL}	0.4	0.9	2.0	Ω	I_{OUT}=40mA
OUT1 maximum current	I_{OUTMAX}	3.0	4.5	-	A	VCC2=18V Design assurance
PROOUT ON resistance	R_{ONPRO}	0.4	0.9	2.0	Ω	I_{PROOUT}=40mA
Turn ON time	t_{PON}	180	265	350	ns	
Turn OFF time	t_{POFF}	180	265	350	ns	
Propagation distortion	t_{PDIST}	-60	0	60	ns	t_{POFF} - t_{PON}
Rise time	t_{RISE}	-	50	100	ns	10nF between OUT1-VEE2
Fall time	t_{FALL}	-	50	100	ns	10nF between OUT1-VEE2
OUT2 ON resistance (Source)	R_{ON2H}	2.0	4.5	9.0	Ω	I_{OUT2}=40mA
OUT2 ON resistance (Sink)	R_{ON2L}	1.5	3.5	7.0	Ω	I_{OUT2}=40mA
OUT2 ON threshold voltage	V_{OUT2ON}	1.8	2	2.2	V	Relative to VEE2
OUT2 output delay time	t_{OUT2ON}	-	15	50	ns	
VREG output voltage	V_{REG}	9	10	11	V	Relative to VEE2
Common Mode Transient Immunity	CM	100	-	-	kV/μs	Design assurance
Protection functions						
VCC1 UVLO OFF voltage	V_{UVLO1H}	4.05	4.25	4.45	V	
VCC1 UVLO ON voltage	V_{UVLO1L}	3.95	4.15	4.35	V	
VCC1 UVLO mask time	$t_{UVLO1MSK}$	4	10	30	μs	
VCC2 UVLO OFF voltage	V_{UVLO2H}	11.5	12.5	13.5	V	
VCC2 UVLO ON voltage	V_{UVLO2L}	10.5	11.5	12.5	V	
VCC2 UVLO mask time	$t_{UVLO2MSK}$	4	10	30	μs	
SCPIN Input voltage	V_{SCPIN}	-	0.1	0.22	V	I_{SCPIN}=1mA
SCP detection voltage	V_{SCDET}	0.665	0.700	0.735	V	
SCP detection mask time	t_{SCPMSK}	0.55	0.8	1.05		
Soft turn OFF release time	t_{STO}	30		110	μs	
Thermal detection voltage	V_{TSDET}	1.60	1.70	1.80	V	
Thermal detection mask time	t_{TSMSK}	4	10	30	μs	
FLT output low voltage	V_{FLTL}	-	0.18	0.40	V	I_{FLT}=5mA
FLTRLS threshold	$V_{TFLTRLS}$	$0.64\times V_{CC1}$ -0.1	$0.64\times V_{CC1}$	$0.64\times V_{CC1}$ +0.1	V	

© 2013 ROHM Co., Ltd. All rights reserved.

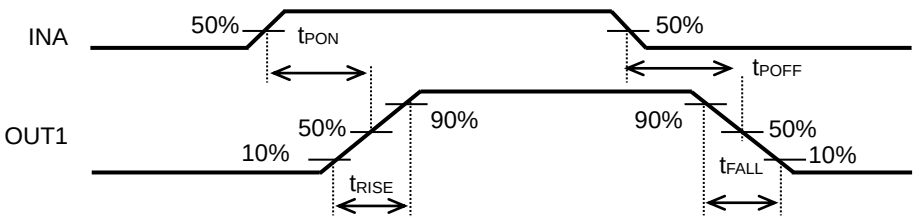

Figure 16. INA-OUT1 Timing Chart

●UL1577 Ratings Table

Following values are described in UL Report.

Parameter	Values	Units	Conditions
Side 1 (Input Side) Circuit Current	0.45	mA	VCC1=5.0V, OUT1=L
Side 2 (Output Side) Circuit Current	3.5	mA	VCC2=18V, VEE2=0V, OUT1=L
Side 1 (Input Side) Consumption Power	2.25	mW	VCC1=5.0V, OUT1=L
Side 2 (Output Side) Consumption Power	63	mW	VCC2=18V, VEE2=0V, OUT1=L
Isolation Voltage	2500	Vrms	
Maximum Operating (Ambient) Temperature	125	℃	
Maximum Junction Temperature	150	℃	
Maximum Strage Temperature	150	℃	
Maximum Data Transmission Rate	2.5	MHz	

●Typical Performance Curves

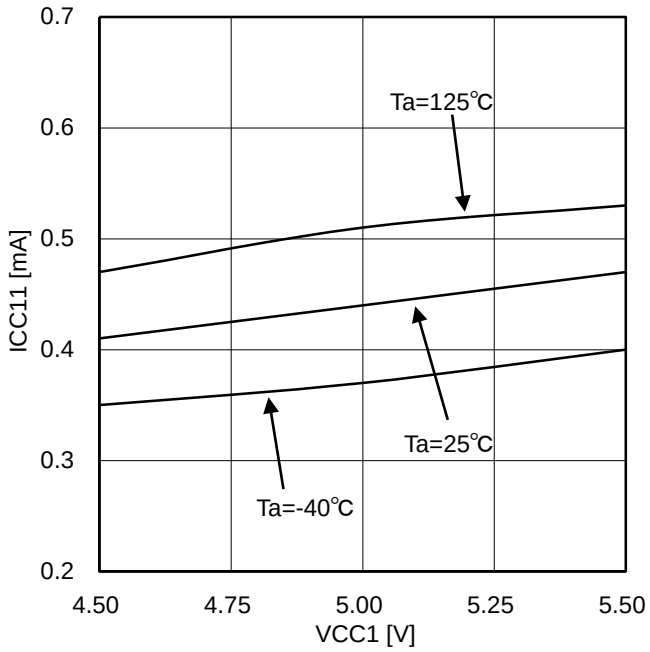

Figure 17. Input side circuit current (at OUT1=L)

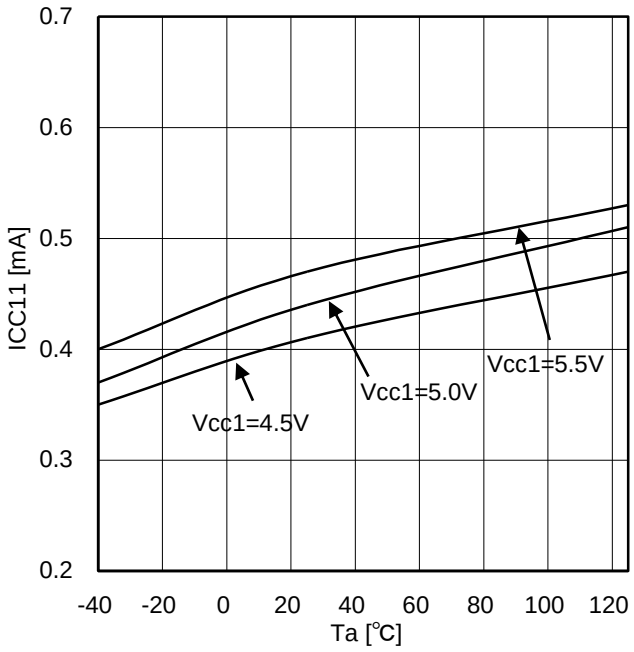

Figure 18. Input side circuit current (at OUT1=L)

© 2013 ROHM Co., Ltd. All rights reserved.

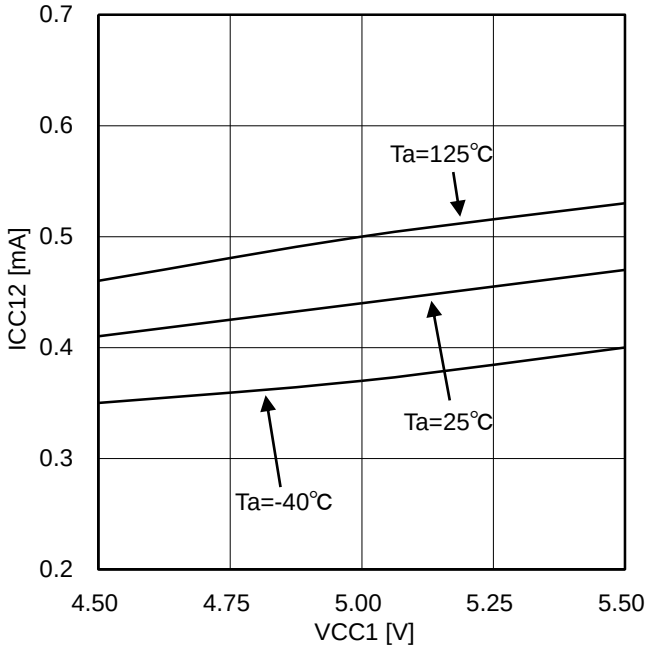

Figure 19. Input side circuit current (at OUT1=H)

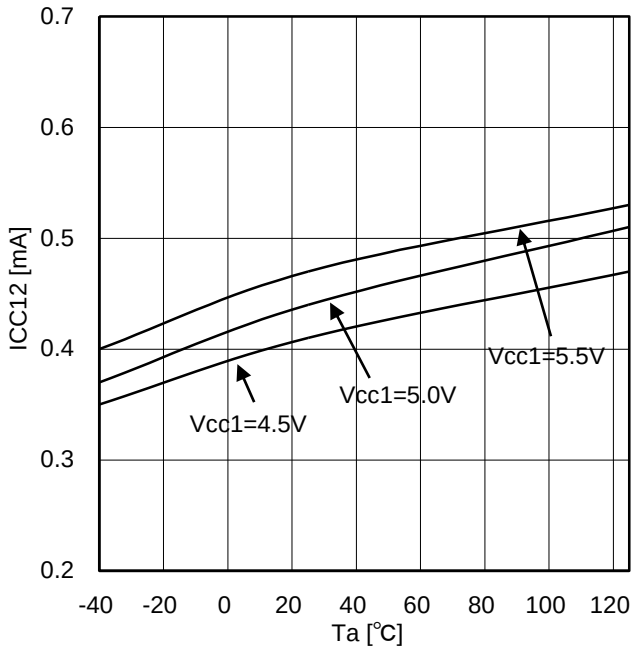

Figure 20. Input side circuit current (at OUT1=H)

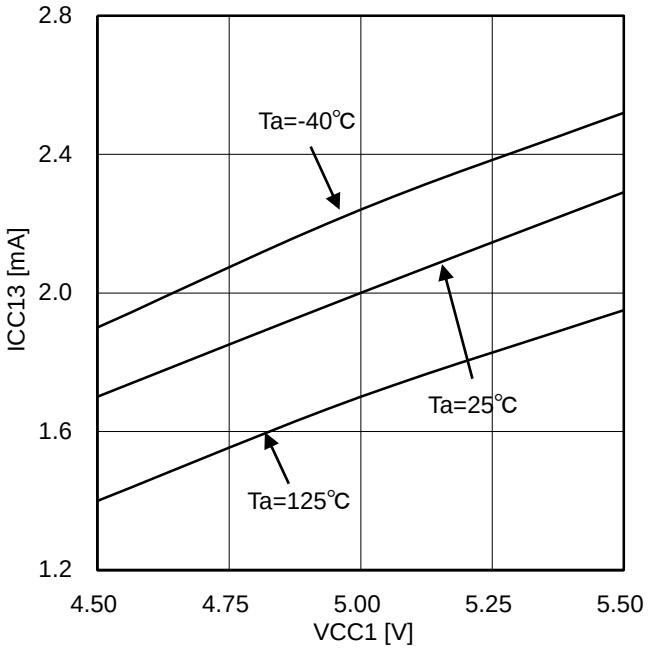

Figure 21. Input side circuit current
(at INA=10kHz and Duty=50%)

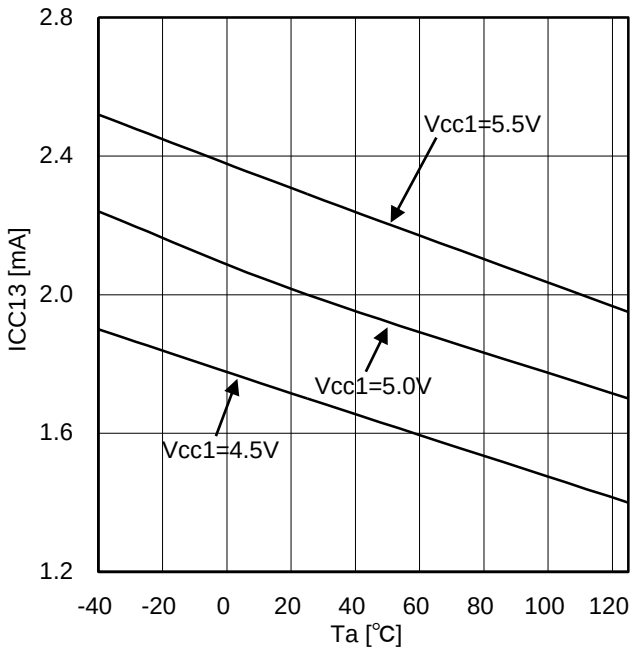

Figure 22. Input side circuit current
(at INA=10kHz and Duty=50%)

© 2013 ROHM Co., Ltd. All rights reserved.

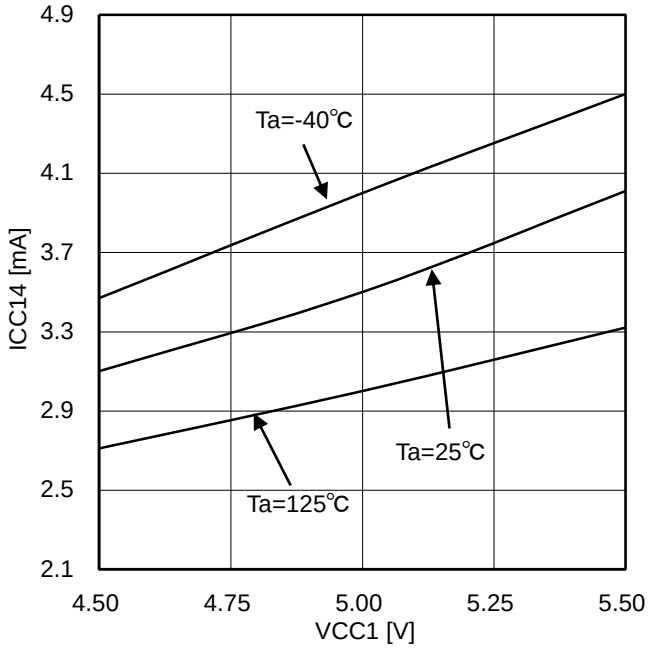

Figure 23. Input side circuit current
(at INA=20kHz and Duty=50%)

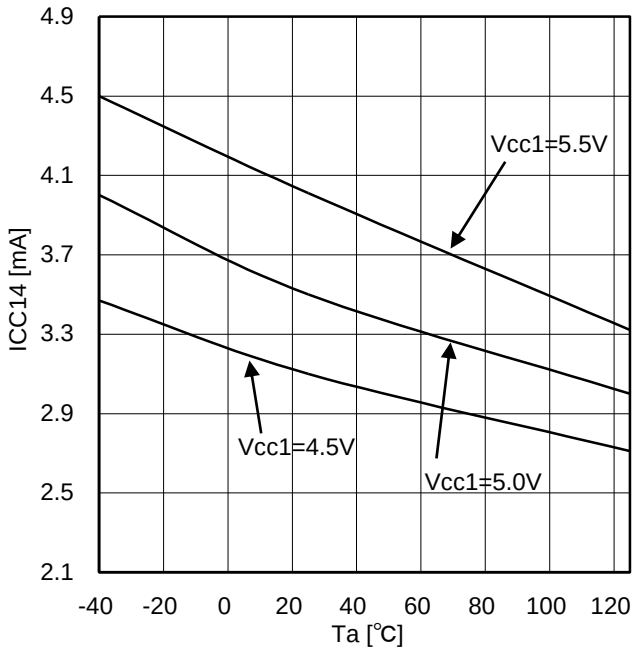

Figure 24. Input side circuit current
(at INA=20kHz and Duty=50%)

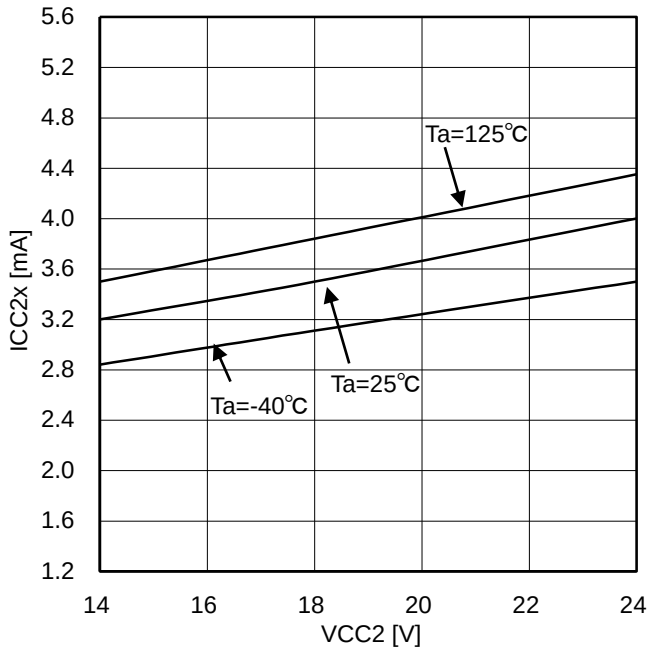

Figure 25. Output side circuit current (at OUT1=L)

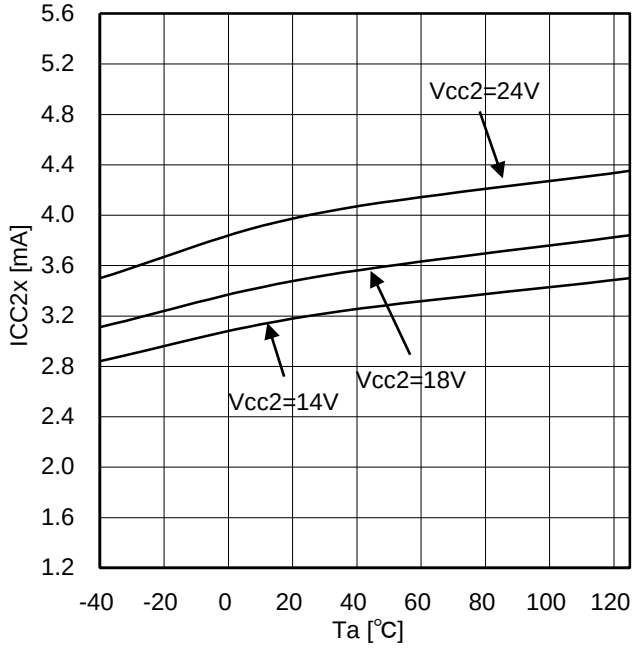

Figure 26. Output side circuit current (at OUT1=L)

© 2013 ROHM Co., Ltd. All rights reserved.

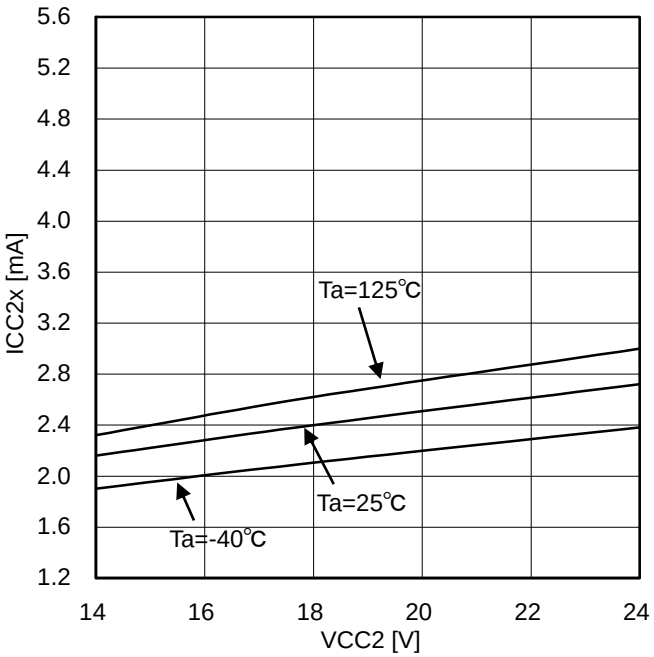

Figure 27. Output side circuit current (at OUT1=H)

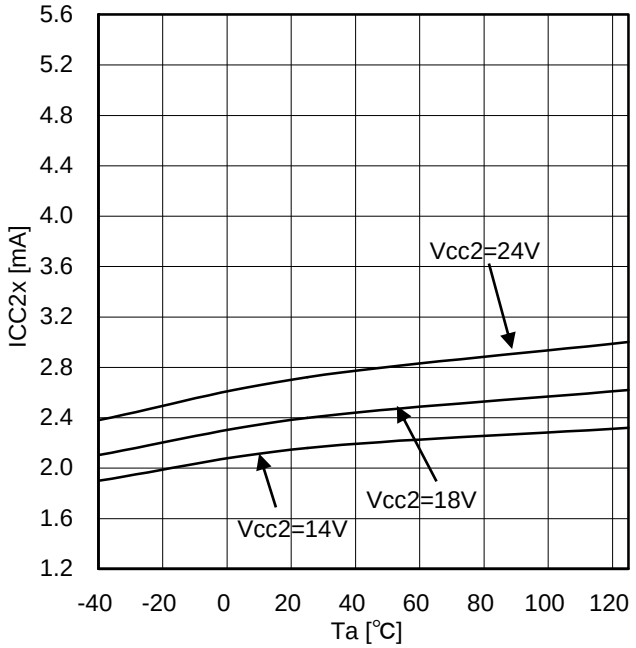

Figure 28. Output side circuit current (at OUT1=H)

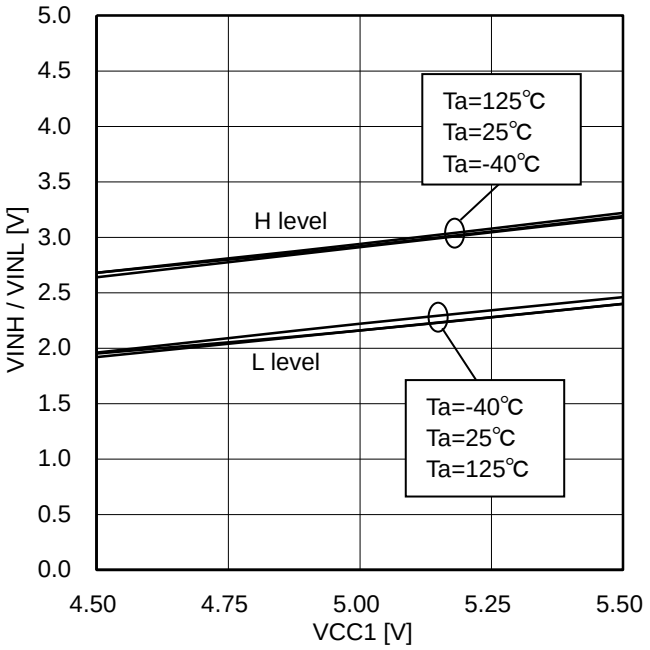

Figure 29. Logic (INA/INB/ENA) High/Low level input voltage

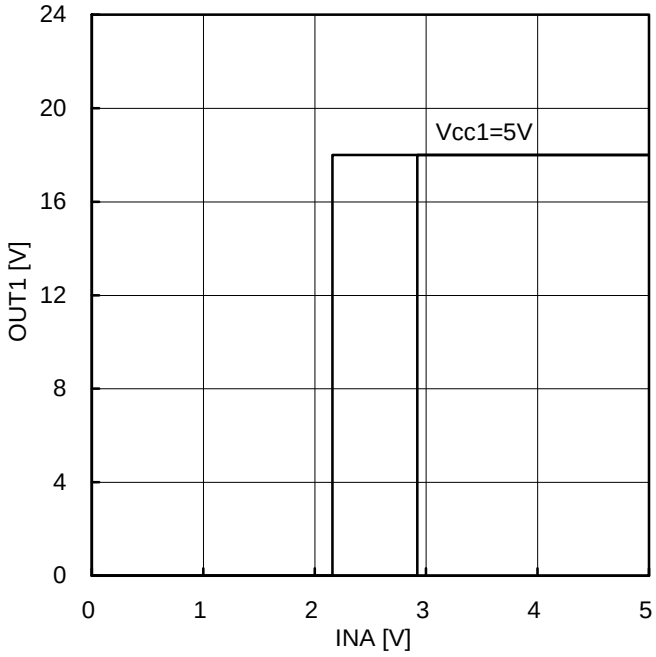

Figure 30. Logic (INA/INB/ENA) High/Low level input voltage at Ta=25℃

© 2013 ROHM Co., Ltd. All rights reserved.

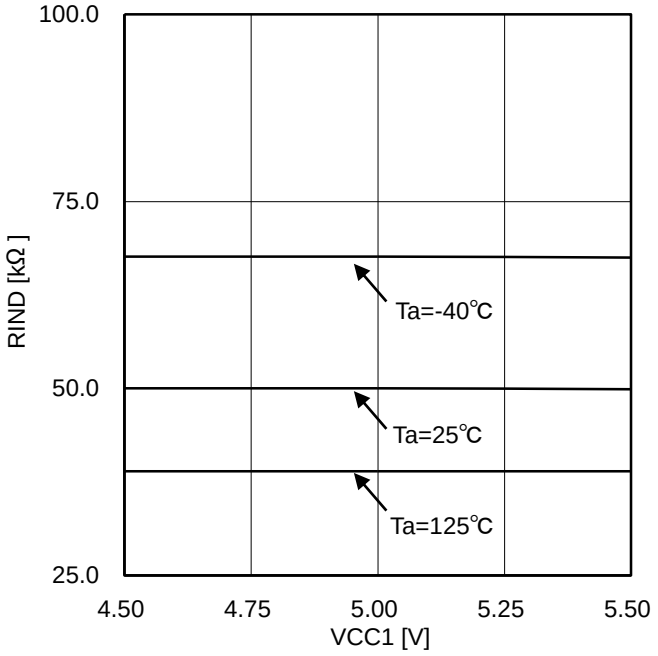

Figure 31. Logic pull-down resistance

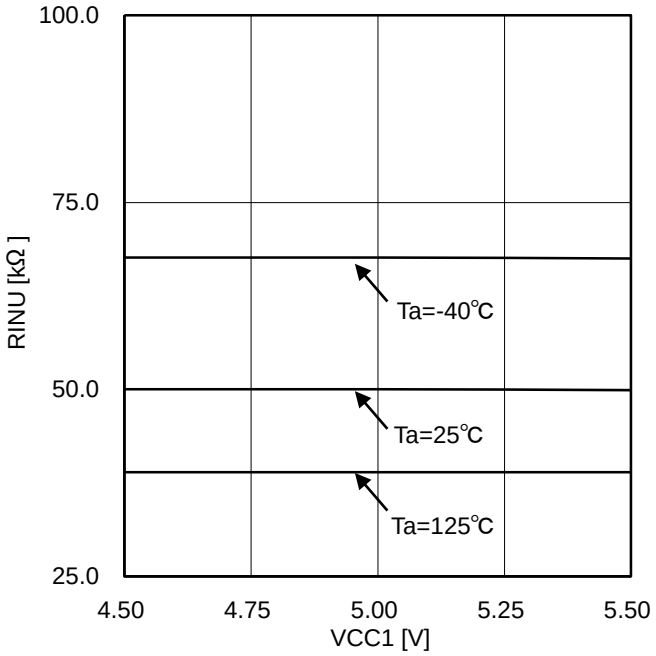

Figure 32. Logic pull-up resistance

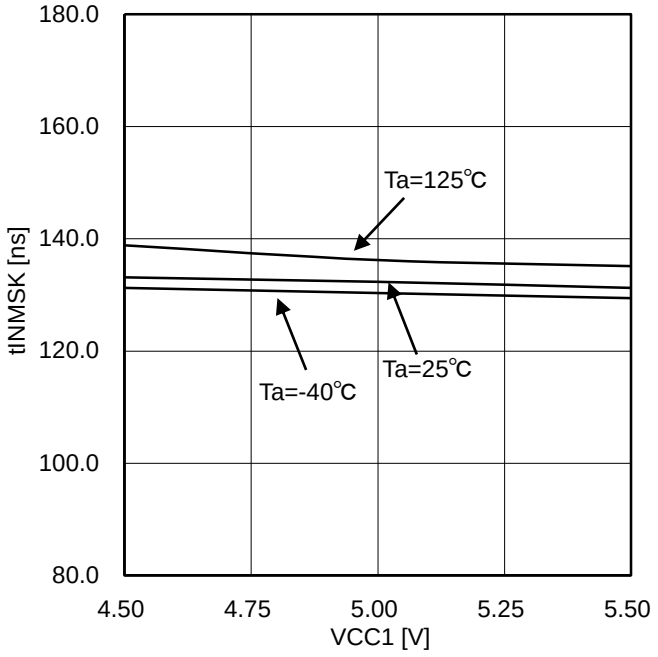

Figure 33. Logic (INA/INB) input mask time (High pulse)

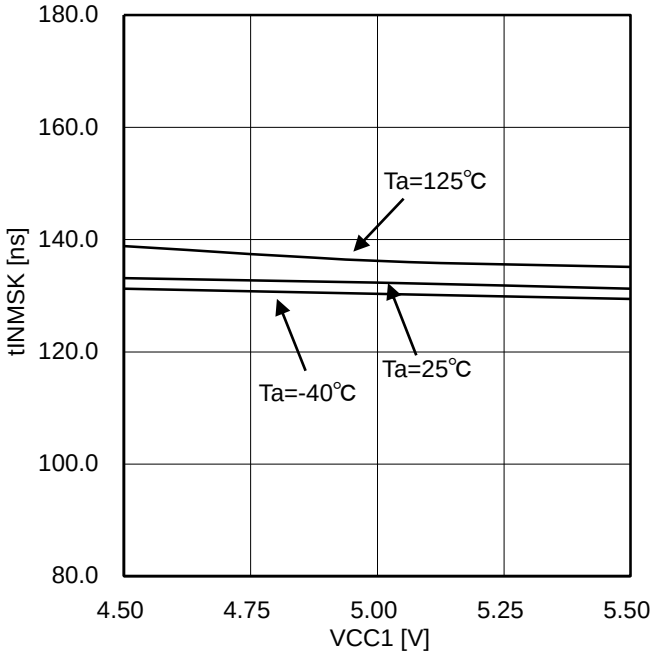

Figure 34. Logic (INA/INB) input mask time (Low pulse)

© 2013 ROHM Co., Ltd. All rights reserved.

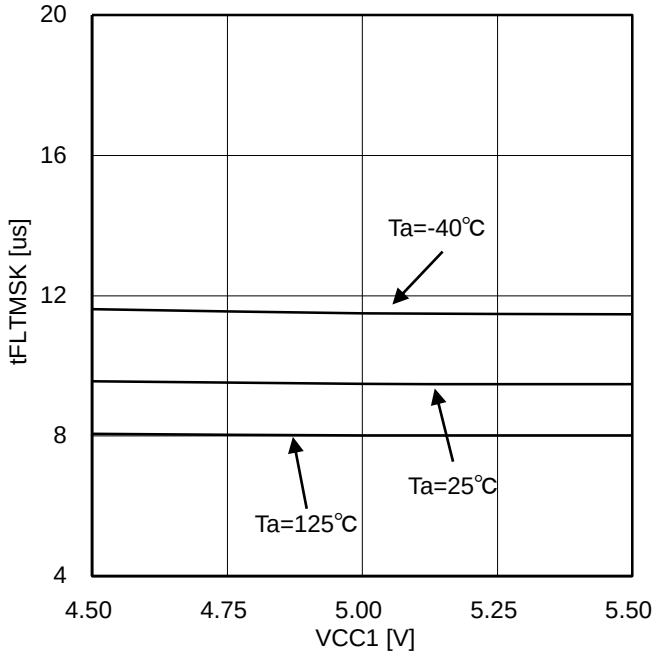

Figure 35. ENA input mask time

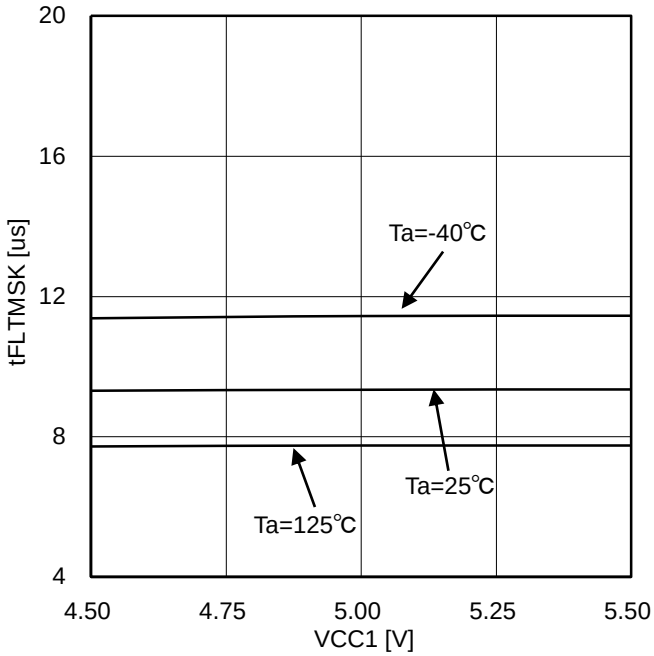

Figure 36. FLT input mask time

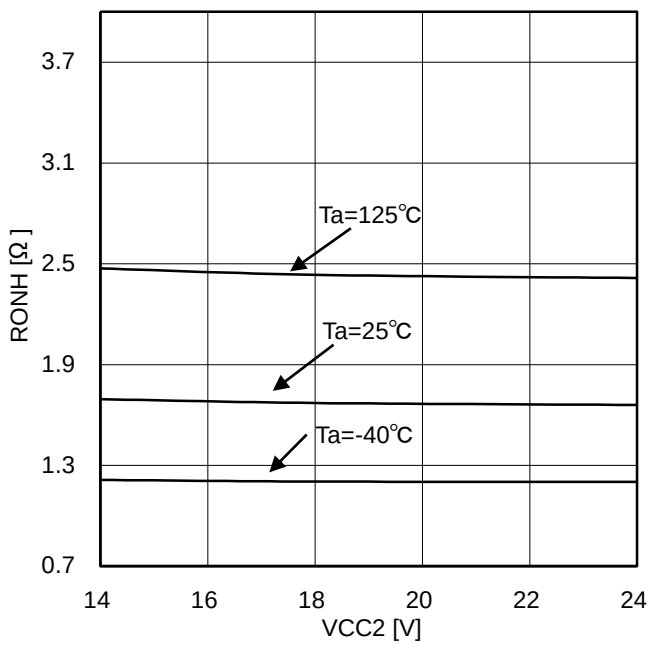

Figure 37. OUT1 ON resistance (Source)

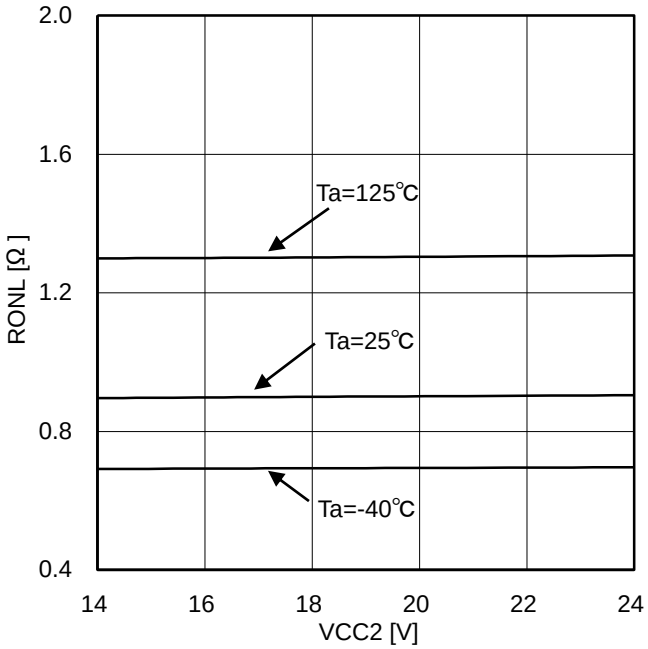

Figure 38. OUT1 ON resistance (Sink)

© 2013 ROHM Co., Ltd. All rights reserved.

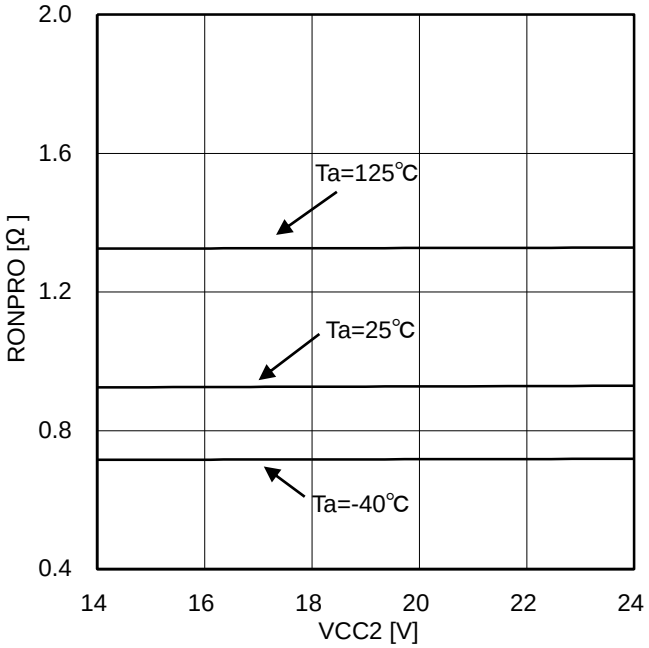

Figure 39. PROOUT ON resistance

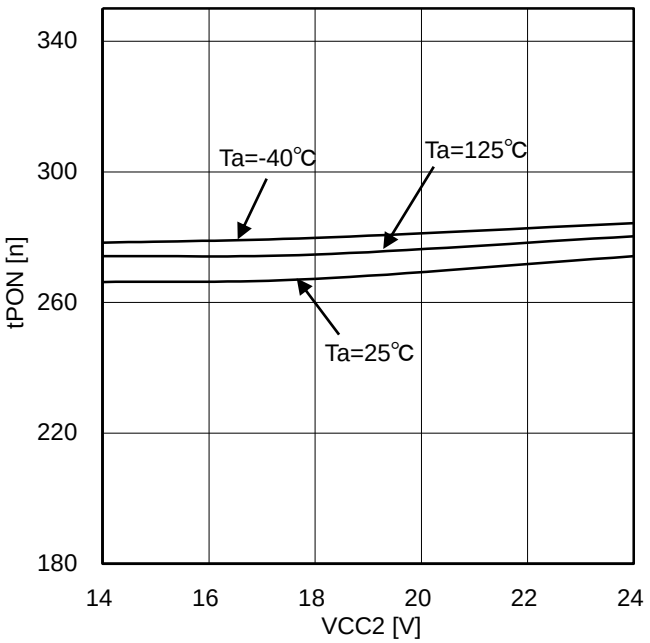

Figure 40. Turn ON time

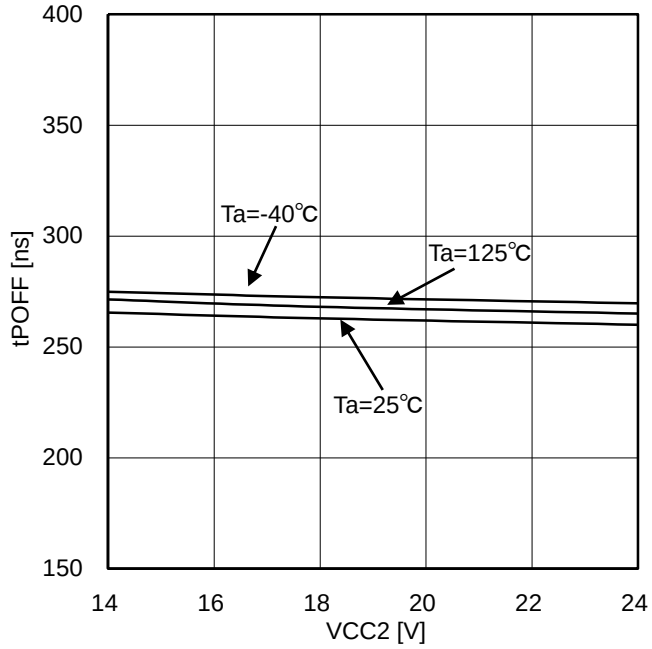

Figure 41. Turn OFF time

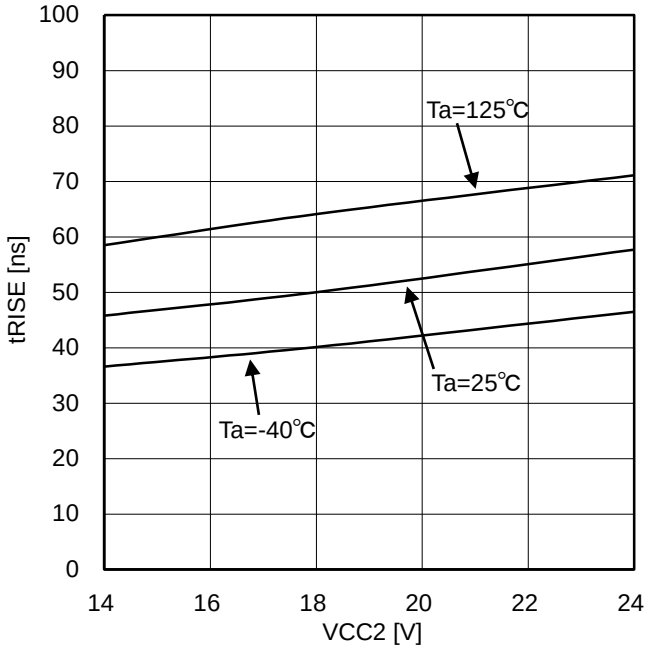

Figure 42. Rise time (10nF between OUT1-VEE2)

© 2013 ROHM Co., Ltd. All rights reserved.

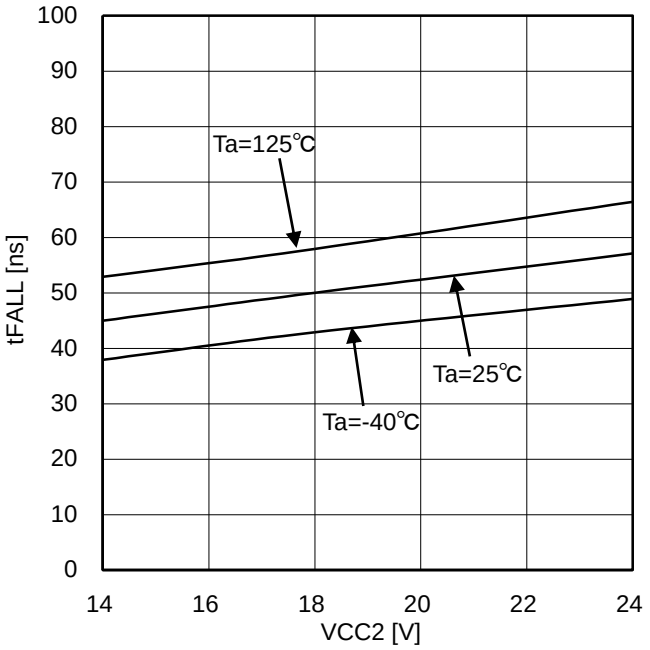

Figure 43. Fall time (10nF between OUT1-VEE2)

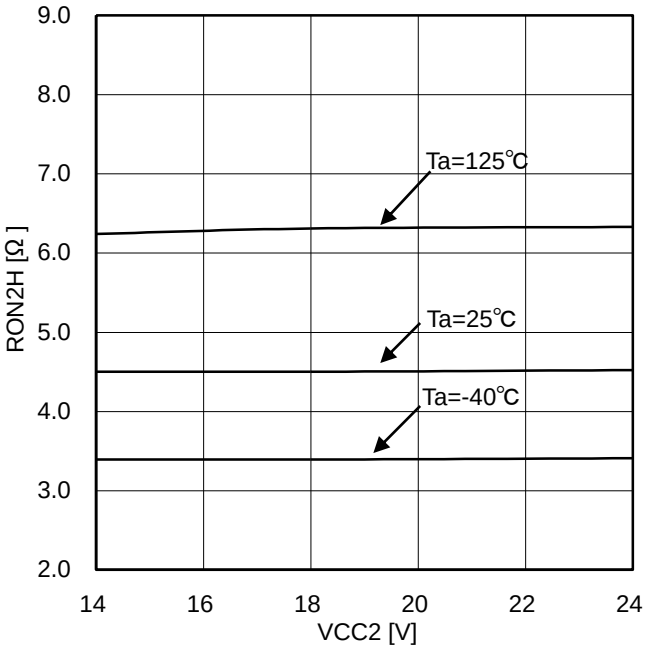

Figure 44. OUT2 ON resistance (Source)

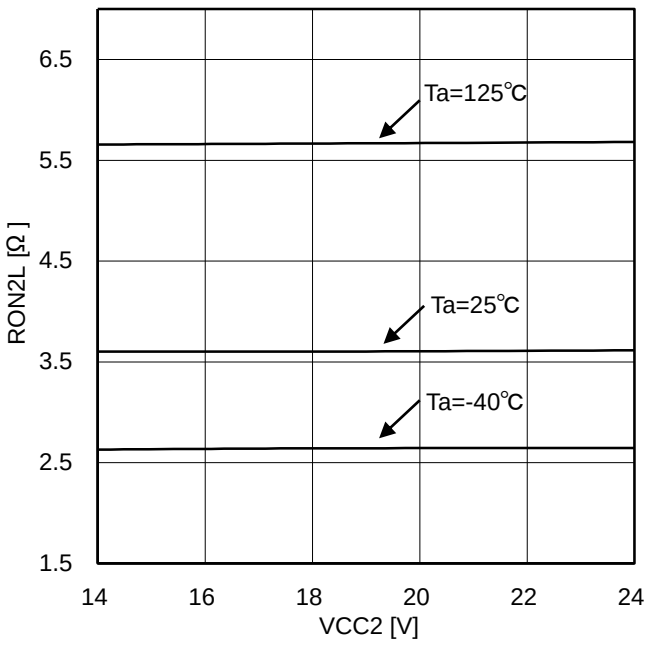

Figure 45. OUT2 ON resistance (Sink)

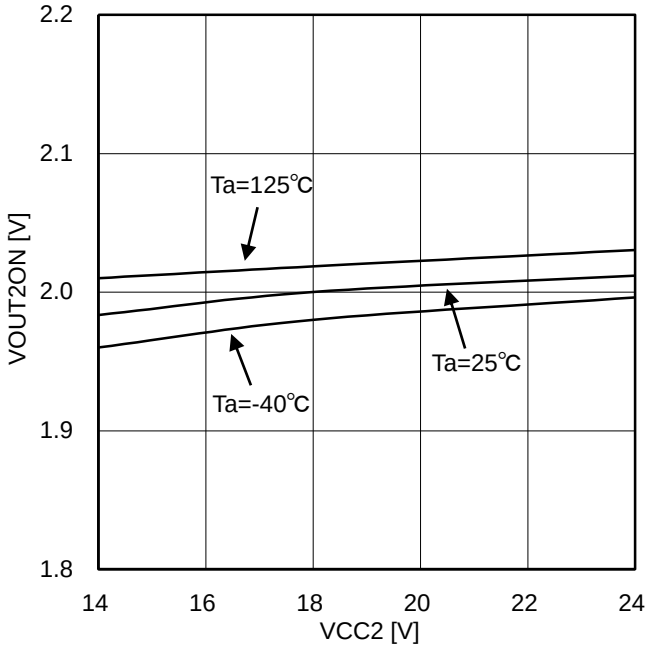

Figure 46. OUT2 ON threshold voltage

© 2013 ROHM Co., Ltd. All rights reserved.

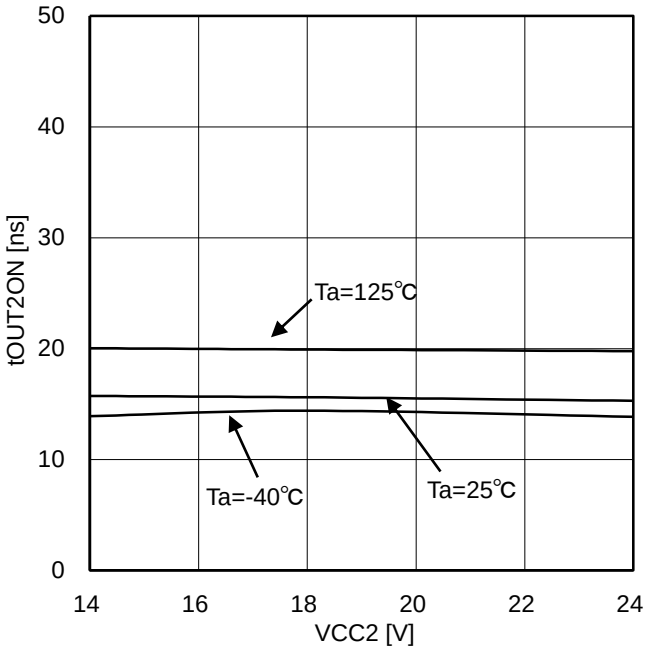

Figure 47. OUT2 output delay time

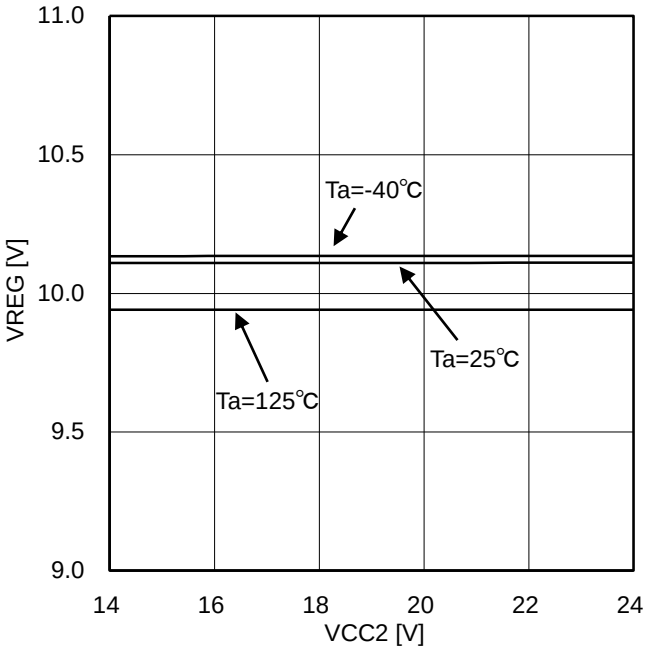

Figure 48. VREG output voltage

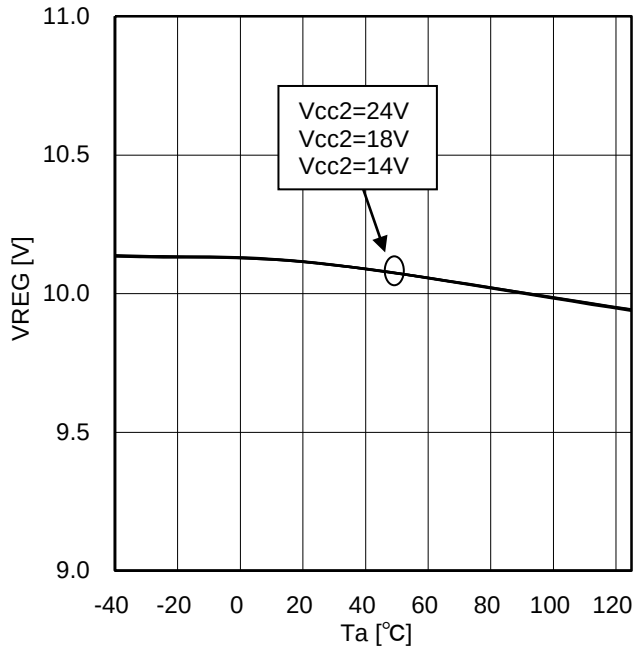

Figure 49. VREG output voltage

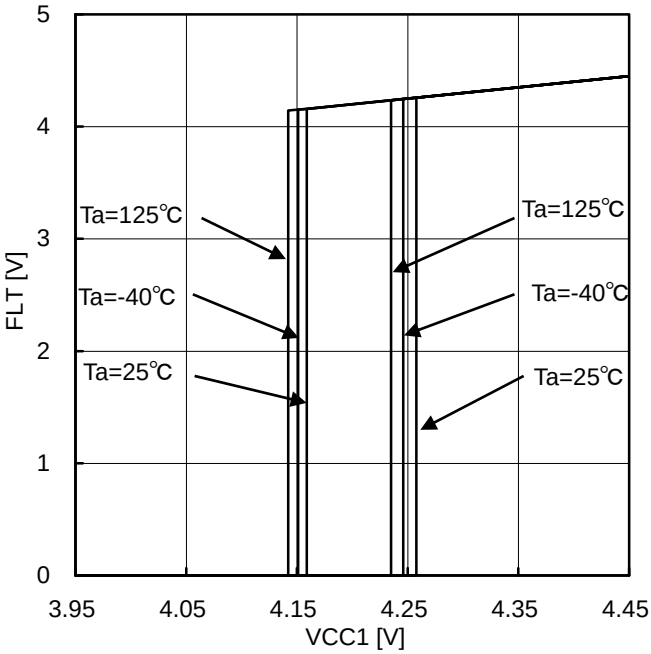

Figure 50. VCC1 UVLO ON/OFF voltage

© 2013 ROHM Co., Ltd. All rights reserved.

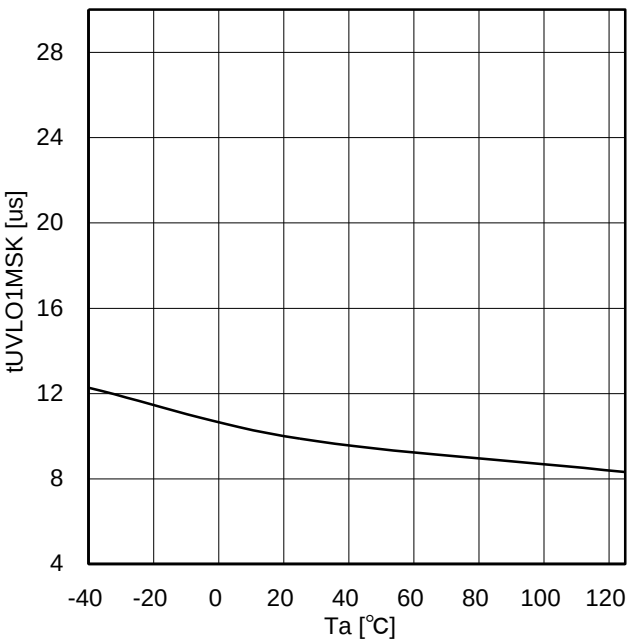

Figure 51. VCC1 UVLO mask time

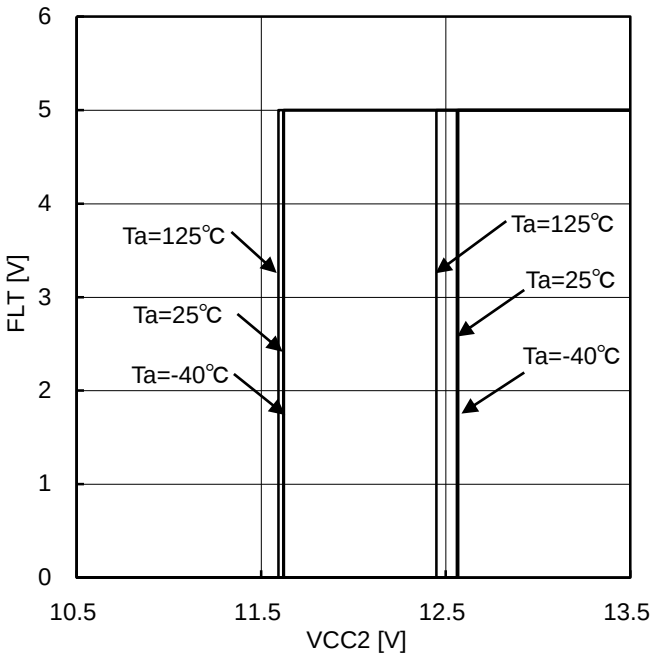

Figure 52. VCC2 UVLO ON/OFF voltage (at VCC1=5V)

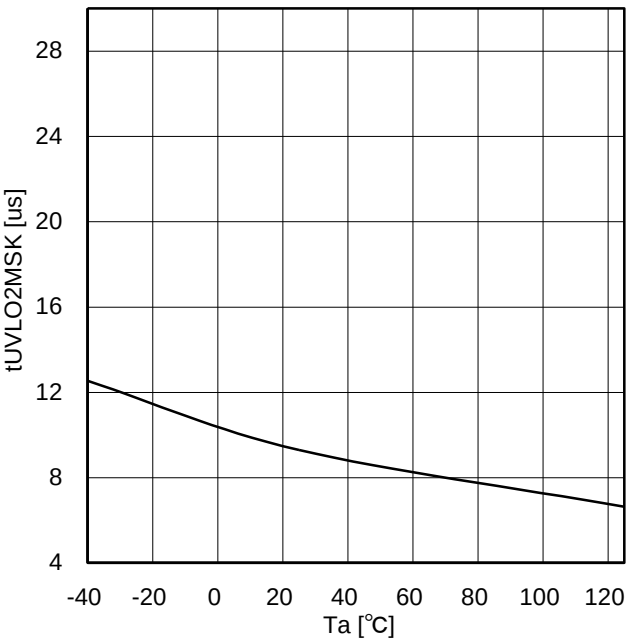

Figure 53. VCC2 UVLO mask time

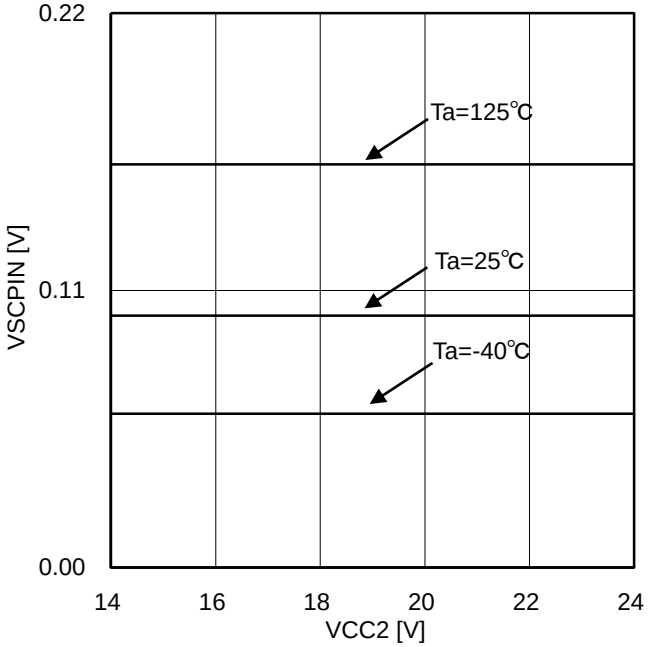

Figure 54. SCPIN input voltage (at ISCPIN=1mA)

© 2013 ROHM Co., Ltd. All rights reserved.

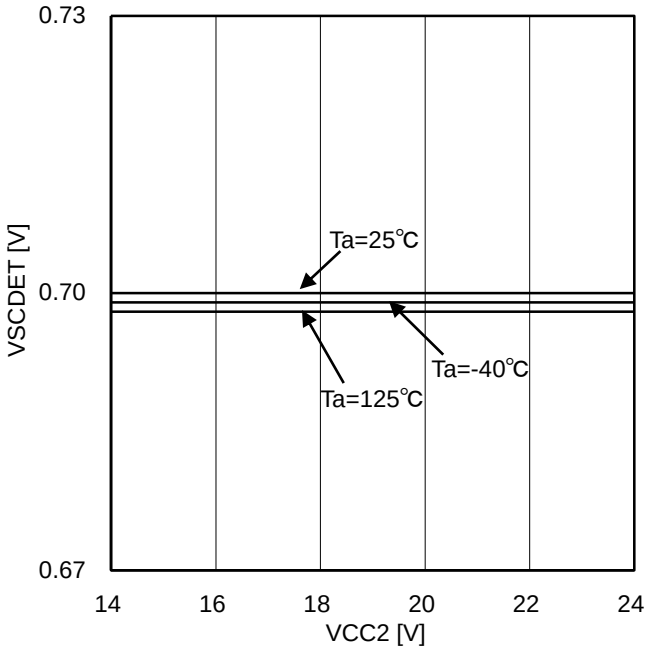

Figure 55. SCP detection voltage

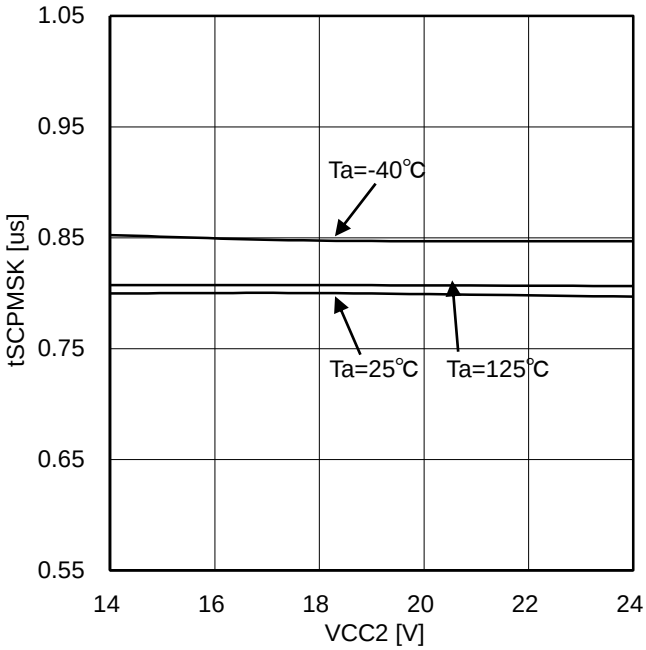

Figure 56. SCP detection mask time

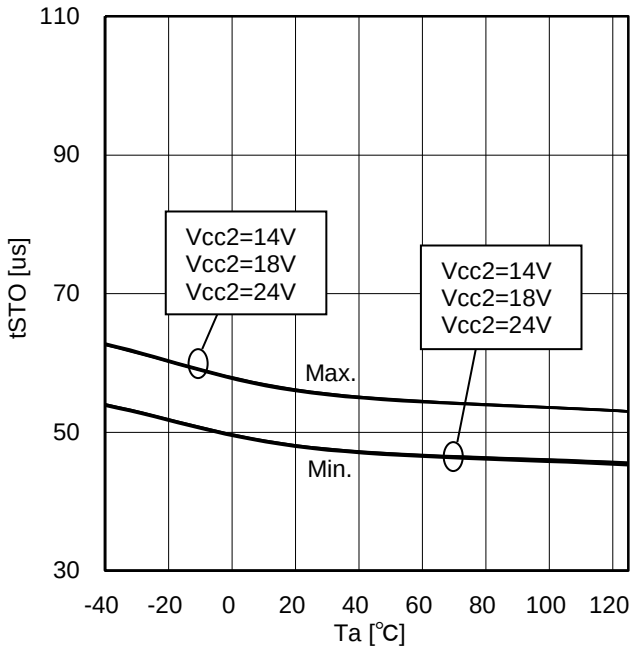

Figure 57. Soft turn OFF release time

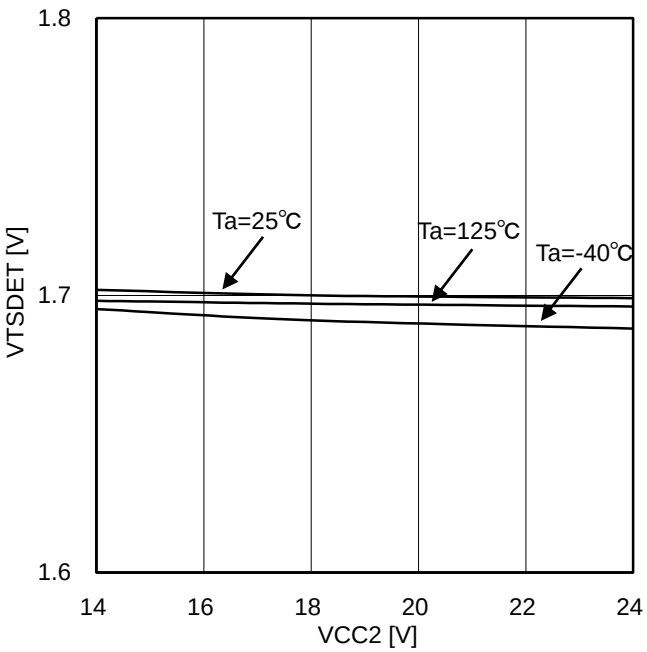

Figure 58. Thermal detection voltage

© 2013 ROHM Co., Ltd. All rights reserved.

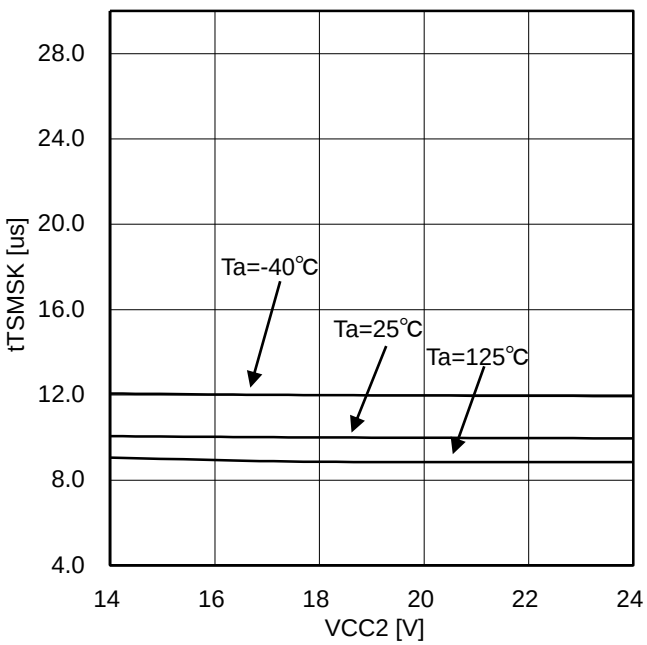

Figure 59. Thermal detection mask time

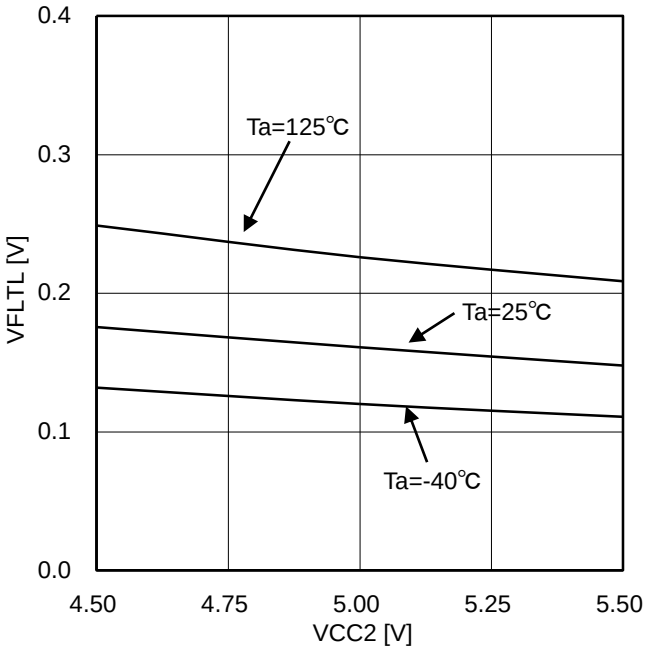

Figure 60. FLT output low voltage (IFLT=5mA)

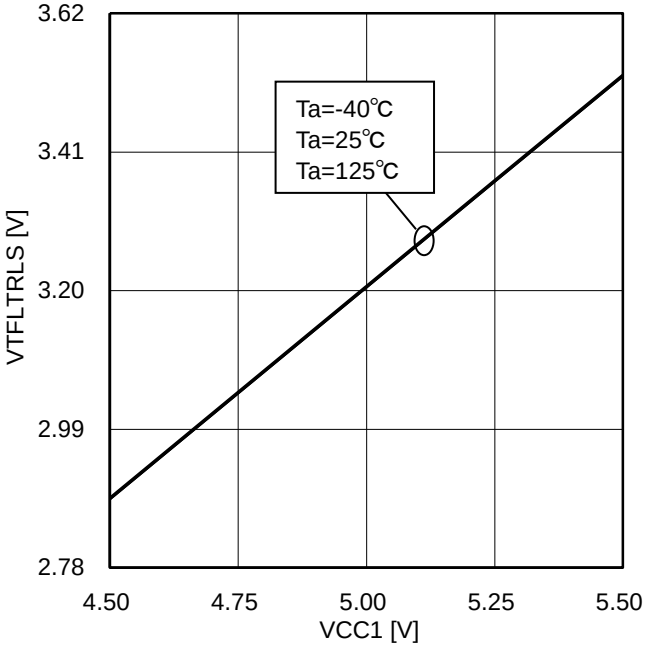

Figure 61. FLTRLS threshold

© 2013 ROHM Co., Ltd. All rights reserved.

●**Selection of Components Externally Connected**

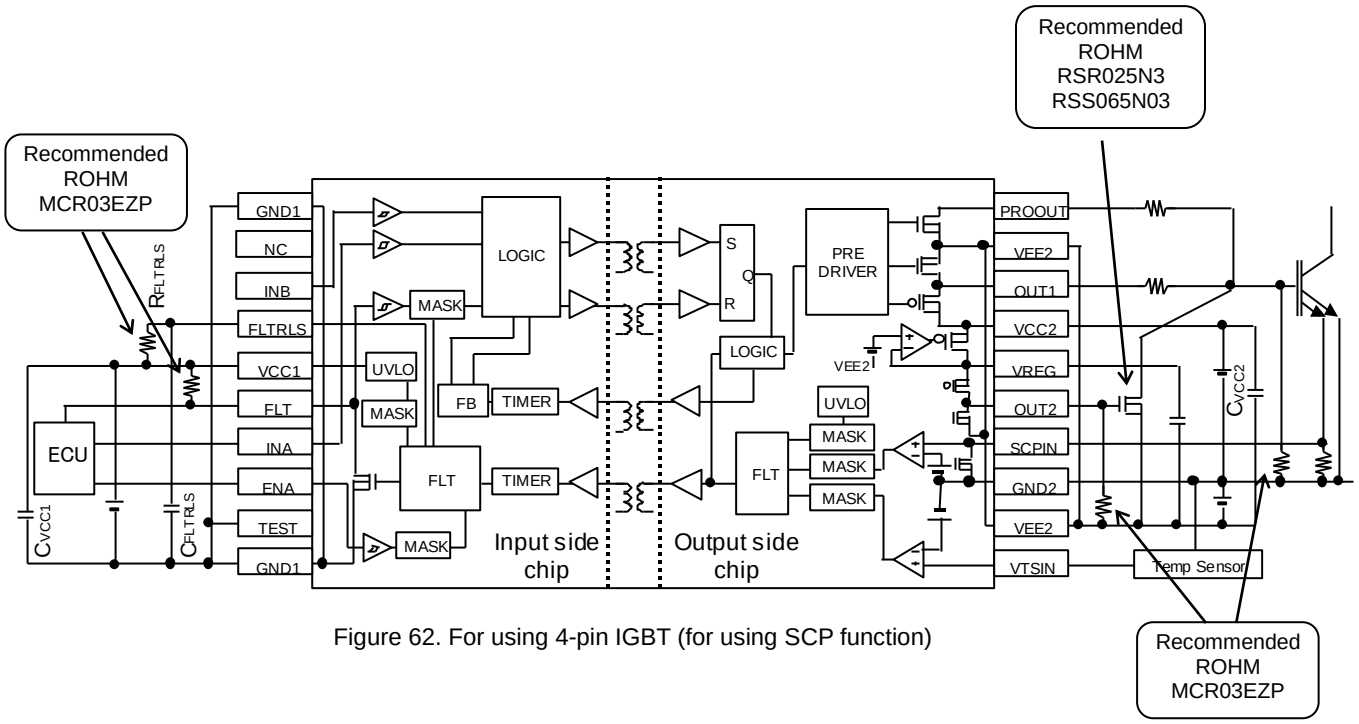

Figure 62. For using 4-pin IGBT (for using SCP function)

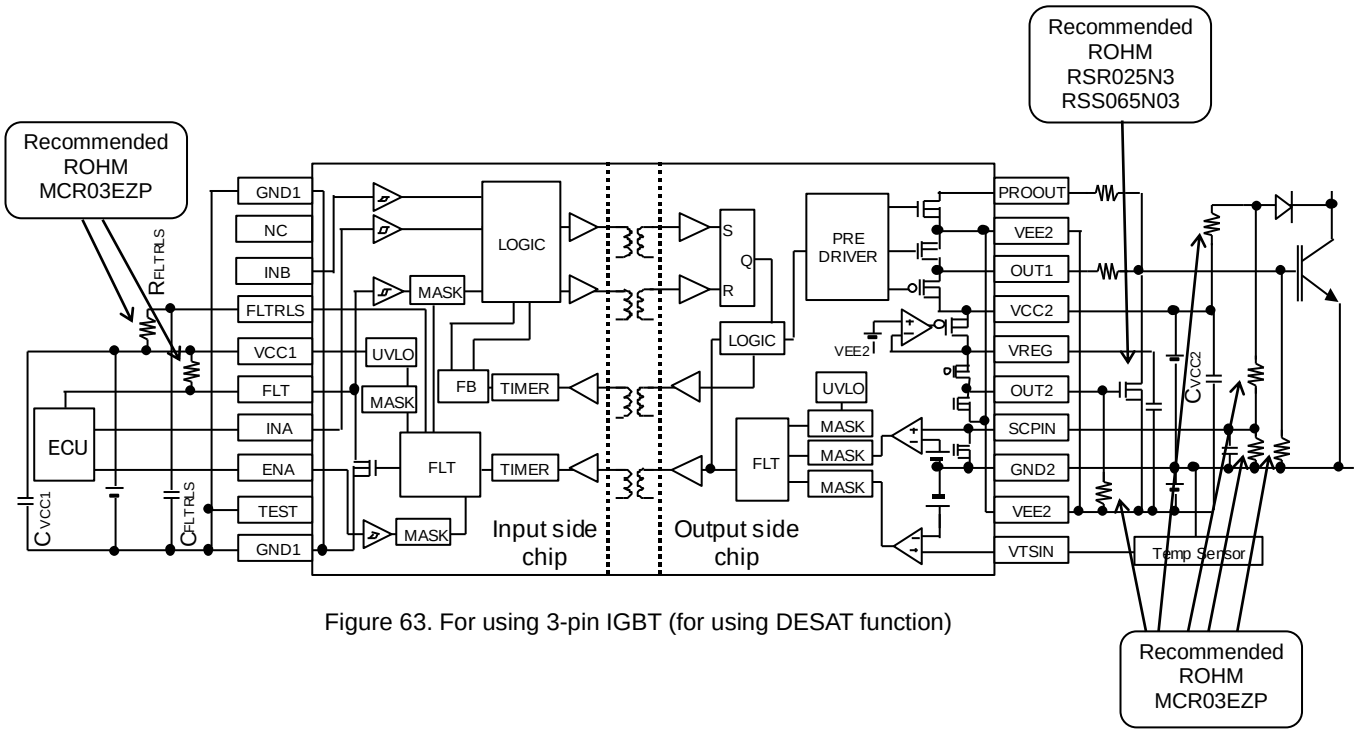

Figure 63. For using 3-pin IGBT (for using DESAT function)

© 2013 ROHM Co., Ltd. All rights reserved.

●**Power Dissipation**

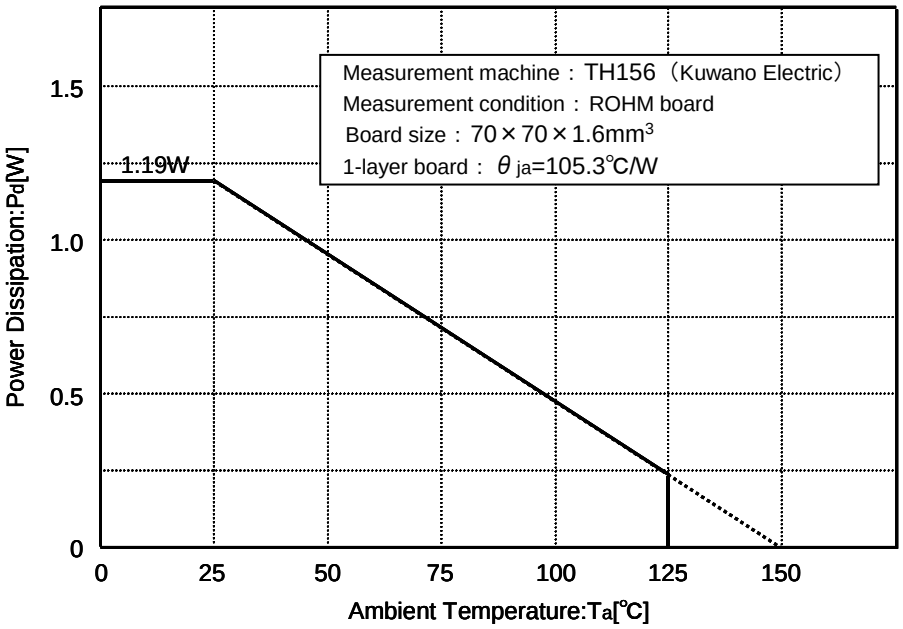

Figure 64. SSOP-B20W Derating Curve

●**Thermal design**

Please design that the IC's chip temperature Tj is not over 150℃, while considering the IC's power consumption (W), package power (Pd) and ambient temperature (Ta). When Tj=150℃ is exceeded the functions as a semiconductor do not operate and some problems (ex. Abnormal operation of various parasitic elements and increasing of leak current) occur. Constant use under these circumstances leads to deterioration and eventually IC may destruct. Tjmax=150℃ must be strictly obeyed under all circumstances.

The IC's consumed power (P) can be estimated roughly with following equation.

$$P = V_{CC1} \cdot I_{CC1} + V_{CC2} \cdot I_{GND2} + (V_{CC2} + V_{EE2}) \cdot (I_{CC2} - I_{GND2}) + I_{ON}^2 \cdot R_{ONH} \cdot t_{ON} \cdot f_{PWM} + I_{OFF}^2 \cdot R_{ONL} \cdot t_{OFF} \cdot f_{PWM}$$

f_{PWM} : PWM frequency
I_{ON} : OUT pin outflow current when OUT is H state.
t_{ON} : Current outflow time from OUT pin when OUT is H state.
I_{OFF} : OUT pin inflow current when OUT is L state.
t_{OFF} : Current inflow time to OUT pin when OUT is L state.

© 2013 ROHM Co., Ltd. All rights reserved.

●**I/O equivalence circuits**

Pin No.	Name / Function	I/O equivalence circuits
1	VTSIN	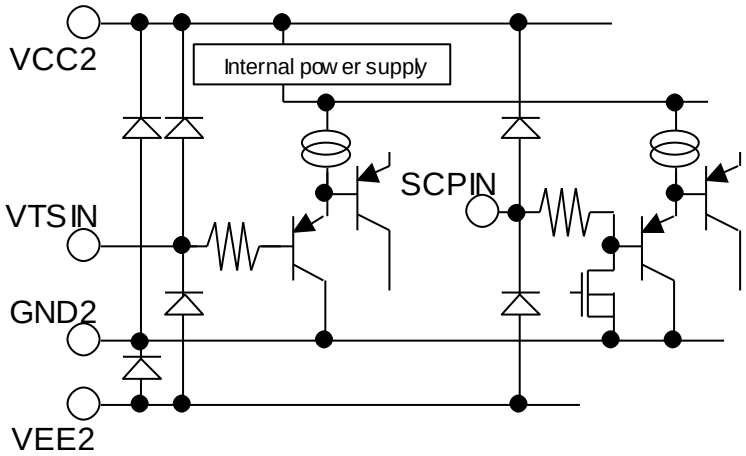
	Thermal detection pin	
4	SCPIN	
	Short current detection pin	
5	OUT2	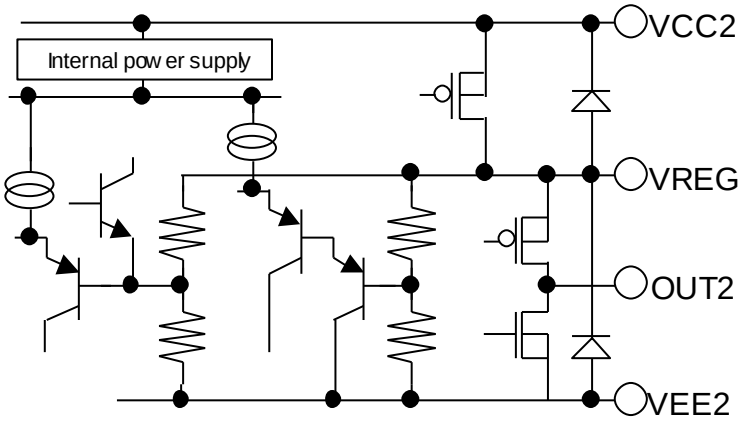
	MOS FET control pin for Miller Clamp	
6	VREG	
	Power supply pin for driving MOS FET for Miller Clamp	
8	OUT	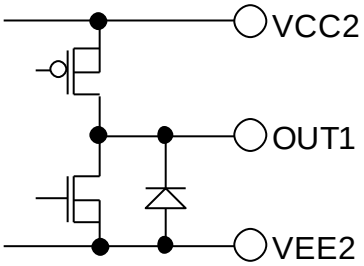
	Output pin	
10	PROOUT	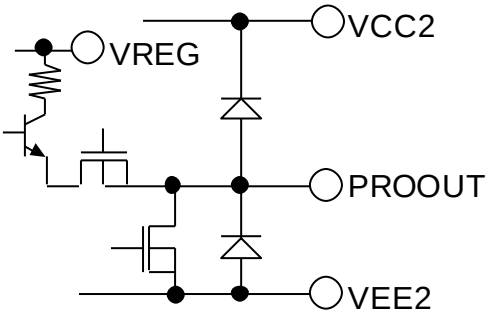
	Soft turn-off pin	

© 2013 ROHM Co., Ltd. All rights reserved.

Pin No.	Name / Function	I/O equivalence circuits
14	FLTRLS Fault output holding time setting pin	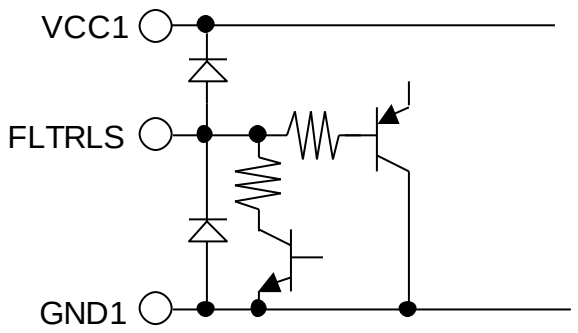
16	FLT Fault output pin	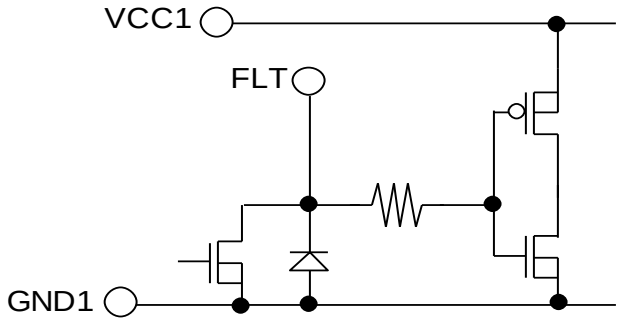
13 17	INB Invert / non-invert selection pin INA Control input pin	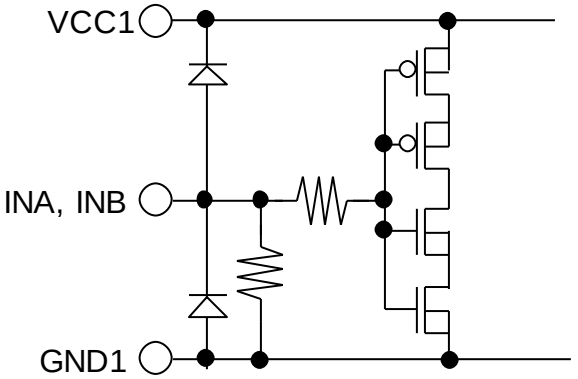
18	ENA Input enabling signal input pin	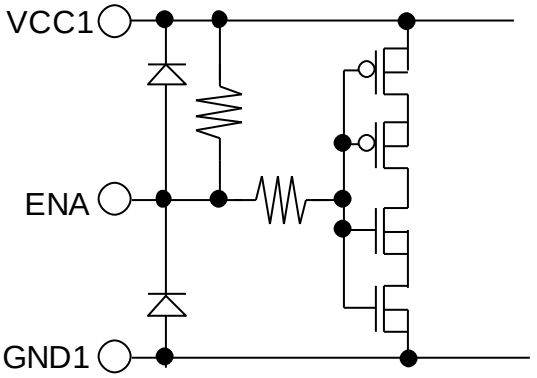
19	TEST Test mode setting pin	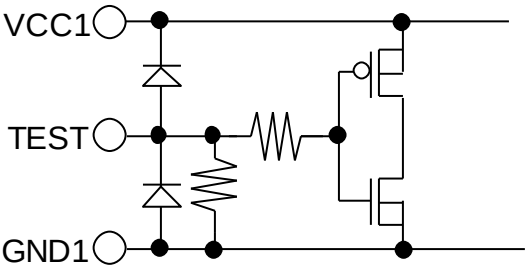

© 2013 ROHM Co., Ltd. All rights reserved.

●Operational Notes

(1) Absolute maximum ratings

An excess in the absolute maximum ratings, such as supply voltage, temperature range of operating conditions, etc., can break down the devices, thus making impossible to identify breaking mode, such as a short circuit or an open circuit. If any over rated values will expect to exceed the absolute maximum ratings, consider adding circuit protection devices, such as fuses.

(2) Connecting the power supply connector backward

Connecting of the power supply in reverse polarity can damage IC. Take precautions when connecting the power supply lines. An external direction diode can be added.

(3) Power supply Lines

Design PCB layout pattern to provide low impedance GND and supply lines. To obtain a low noise ground and supply line, separate the ground section and supply lines of the digital and analog blocks. Furthermore, for all power supply terminals to ICs, connect a capacitor between the power supply and the GND terminal. When applying electrolytic capacitors in the circuit, not that capacitance characteristic values are reduced at low temperatures.

(4) GND1 Potential

The potential of GND1 pin must be minimum potential in all operating conditions. (Input side ; 11pin to 20pin)

(5) VEE2 Potential

The potential of VEE2 pin must be minimum potential in all operating conditions. (Output side ; 1pin to 10pin)

(6) Thermal design

Use a thermal design that allows for a sufficient margin in light of the power dissipation (Pd) in actual operating conditions.

(7) Inter-pin shorts and mounting errors

When attaching to a printed circuit board, pay close attention to the direction of the IC and displacement. Improper attachment may lead to destruction of the IC. There is also possibility of destruction from short circuits which can be caused by foreign matter entering between outputs or an output and the power supply or GND.

(8) Operation in a strong electric field

Use caution when using the IC in the presence of a strong electromagnetic field as doing so may cause the IC to malfunction.

(9) Inspection of the application board

During inspection of the application board, if a capacitor is connected to a pin with low impedance there is a possibility that it could cause stress to the IC, therefore an electrical discharge should be performed after each process. Also, as a measure again electrostatic discharge, it should be earthed during the assembly process and special care should be taken during transport or storage. Furthermore, when connecting to the jig during the inspection process, the power supply should first be turned off and then removed before the inspection.

(10) Input terminal of IC

Between each element there is a P+ isolation for element partition and a P substrate. This P layer and each element's N layer make up the P-N junction, and various parasitic elements are made up.

For example, when the resistance and transistor are connected to the terminal as shown in figure 65,

○When GND＞(Terminal A) at the resistance and GND＞(Terminal B) at the transistor (NPN), the P-N junction operates as a parasitic diode.

○Also, when GND＞(Terminal B) at the transistor (NPN), The parasitic NPN transistor operates with the N layers of other elements close to the aforementioned parasitic diode.

Because of the IC's structure, the creation of parasitic elements is inevitable from the electrical potential relationship. The operation of parasitic elements causes interference in circuit operation, and can lead to malfunction and destruction. Therefore, be careful not to use it in a way which causes the parasitic elements to operate, such as by applying voltage that is lower than the GND (P substrate) to the input terminal.

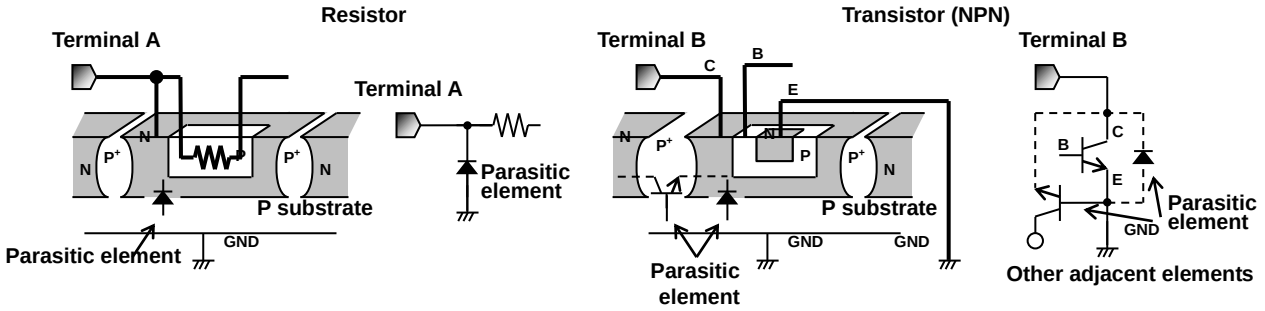

Figure 65. Pattern Diagram of Parasitic Element

© 2013 ROHM Co., Ltd. All rights reserved.

(11) Ground Wiring Patterns

When using both small signal and large current GND patterns, it is recommended to isolate the two ground patterns, placing a single ground point at the application's reference point so that the pattern wiring resistance and voltage variations caused by large currents do not cause variations in the small signal ground voltage. Be careful not to change the GND wiring pattern potential of any external components, either.

●Ordering Information

B M 6 1 0 1 F V - CE 2

- Part Number
- Package
  FV:SSOP-B20W
- Product class
  C : for Automotive applications
  Packaging and forming specification
  E2: Embossed tape and reel

●Physical Dimension Tape and Reel Information

SSOP-B20W

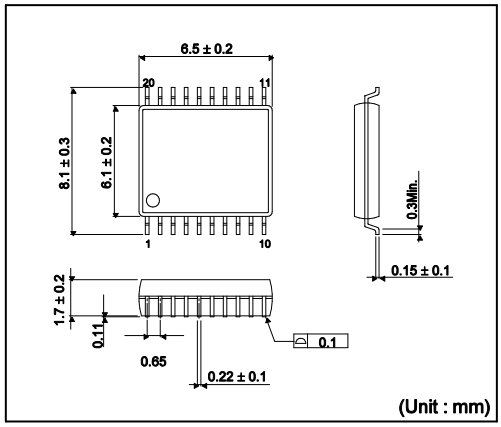

<Tape and Reel information>

Tape	Embossed carrier tape
Quantity	2000pcs
Direction of feed	E2 (The direction is the 1pin of product is at the upper left when you hold reel on the left hand and you pull out the tape on the right hand)

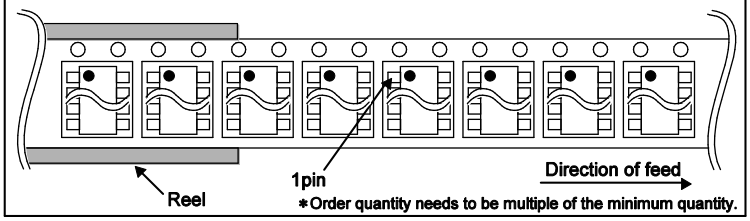

∗Order quantity needs to be multiple of the minimum quantity.

●Marking Diagram

SSOP-B20W(TOP VIEW)

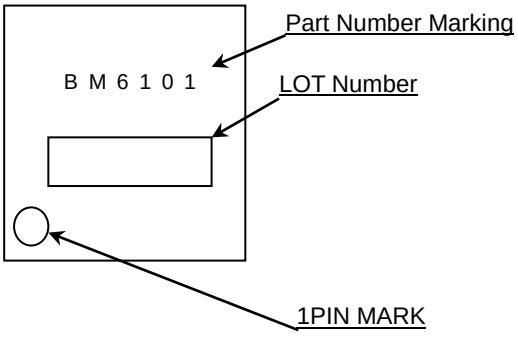

© 2013 ROHM Co., Ltd. All rights reserved.

●**Revision History**

Date	Revision	Changes
24.Jun.2013	001	New Release
20.May.2015	002	P.1 Features Adding item (UL1577 Recognized, AEC-Q100 Qualified) P.4 Description of Pins Adding TEST pin
25.Dec.2015	003	P.13 Adding UL1577 Rating Table

© 2013 ROHM Co., Ltd. All rights reserved.

Notice

Precaution on using ROHM Products

1. If you intend to use our Products in devices requiring extremely high reliability (such as medical equipment (Note 1), aircraft/spacecraft, nuclear power controllers, etc.) and whose malfunction or failure may cause loss of human life, bodily injury or serious damage to property ("Specific Applications"), please consult with the ROHM sales representative in advance. Unless otherwise agreed in writing by ROHM in advance, ROHM shall not be in any way responsible or liable for any damages, expenses or losses incurred by you or third parties arising from the use of any ROHM's Products for Specific Applications.

(Note1) Medical Equipment Classification of the Specific Applications

JAPAN	USA	EU	CHINA
CLASSⅢ	CLASSⅢ	CLASSⅡb	CLASSⅢ
CLASSⅣ		CLASSⅢ	

2. ROHM designs and manufactures its Products subject to strict quality control system. However, semiconductor products can fail or malfunction at a certain rate. Please be sure to implement, at your own responsibilities, adequate safety measures including but not limited to fail-safe design against the physical injury, damage to any property, which a failure or malfunction of our Products may cause. The following are examples of safety measures:
   [a] Installation of protection circuits or other protective devices to improve system safety
   [b] Installation of redundant circuits to reduce the impact of single or multiple circuit failure

3. Our Products are not designed under any special or extraordinary environments or conditions, as exemplified below. Accordingly, ROHM shall not be in any way responsible or liable for any damages, expenses or losses arising from the use of any ROHM's Products under any special or extraordinary environments or conditions. If you intend to use our Products under any special or extraordinary environments or conditions (as exemplified below), your independent verification and confirmation of product performance, reliability, etc, prior to use, must be necessary:
   [a] Use of our Products in any types of liquid, including water, oils, chemicals, and organic solvents
   [b] Use of our Products outdoors or in places where the Products are exposed to direct sunlight or dust
   [c] Use of our Products in places where the Products are exposed to sea wind or corrosive gases, including Cl_2, H_2S, NH_3, SO_2, and NO_2
   [d] Use of our Products in places where the Products are exposed to static electricity or electromagnetic waves
   [e] Use of our Products in proximity to heat-producing components, plastic cords, or other flammable items
   [f] Sealing or coating our Products with resin or other coating materials
   [g] Use of our Products without cleaning residue of flux (even if you use no-clean type fluxes, cleaning residue of flux is recommended); or Washing our Products by using water or water-soluble cleaning agents for cleaning residue after soldering
   [h] Use of the Products in places subject to dew condensation

4. The Products are not subject to radiation-proof design.

5. Please verify and confirm characteristics of the final or mounted products in using the Products.

6. In particular, if a transient load (a large amount of load applied in a short period of time, such as pulse. is applied, confirmation of performance characteristics after on-board mounting is strongly recommended. Avoid applying power exceeding normal rated power; exceeding the power rating under steady-state loading condition may negatively affect product performance and reliability.

7. De-rate Power Dissipation depending on ambient temperature. When used in sealed area, confirm that it is the use in the range that does not exceed the maximum junction temperature.

8. Confirm that operation temperature is within the specified range described in the product specification.

9. ROHM shall not be in any way responsible or liable for failure induced under deviant condition from what is defined in this document.

Precaution for Mounting / Circuit board design

1. When a highly active halogenous (chlorine, bromine, etc.) flux is used, the residue of flux may negatively affect product performance and reliability.

2. In principle, the reflow soldering method must be used on a surface-mount products, the flow soldering method must be used on a through hole mount products. If the flow soldering method is preferred on a surface-mount products, please consult with the ROHM representative in advance.

For details, please refer to ROHM Mounting specification

© 2015 ROHM Co., Ltd. All rights reserved.

Precautions Regarding Application Examples and External Circuits

1. If change is made to the constant of an external circuit, please allow a sufficient margin considering variations of the characteristics of the Products and external components, including transient characteristics, as well as static characteristics.

2. You agree that application notes, reference designs, and associated data and information contained in this document are presented only as guidance for Products use. Therefore, in case you use such information, you are solely responsible for it and you must exercise your own independent verification and judgment in the use of such information contained in this document. ROHM shall not be in any way responsible or liable for any damages, expenses or losses incurred by you or third parties arising from the use of such information.

Precaution for Electrostatic

This Product is electrostatic sensitive product, which may be damaged due to electrostatic discharge. Please take proper caution in your manufacturing process and storage so that voltage exceeding the Products maximum rating will not be applied to Products. Please take special care under dry condition (e.g. Grounding of human body / equipment / solder iron, isolation from charged objects, setting of Ionizer, friction prevention and temperature / humidity control).

Precaution for Storage / Transportation

1. Product performance and soldered connections may deteriorate if the Products are stored in the places where:
   [a] the Products are exposed to sea winds or corrosive gases, including Cl2, H2S, NH3, SO2, and NO2
   [b] the temperature or humidity exceeds those recommended by ROHM
   [c] the Products are exposed to direct sunshine or condensation
   [d] the Products are exposed to high Electrostatic

2. Even under ROHM recommended storage condition, solderability of products out of recommended storage time period may be degraded. It is strongly recommended to confirm solderability before using Products of which storage time is exceeding the recommended storage time period.

3. Store / transport cartons in the correct direction, which is indicated on a carton with a symbol. Otherwise bent leads may occur due to excessive stress applied when dropping of a carton.

4. Use Products within the specified time after opening a humidity barrier bag. Baking is required before using Products of which storage time is exceeding the recommended storage time period.

Precaution for Product Label

A two-dimensional barcode printed on ROHM Products label is for ROHM's internal use only.

Precaution for Disposition

When disposing Products please dispose them properly using an authorized industry waste company.

Precaution for Foreign Exchange and Foreign Trade act

Since concerned goods might be fallen under listed items of export control prescribed by Foreign exchange and Foreign trade act, please consult with ROHM in case of export.

Precaution Regarding Intellectual Property Rights

1. All information and data including but not limited to application example contained in this document is for reference only. ROHM does not warrant that foregoing information or data will not infringe any intellectual property rights or any other rights of any third party regarding such information or data.

2. ROHM shall not have any obligations where the claims, actions or demands arising from the combination of the Products with other articles such as components, circuits, systems or external equipment (including software).

3. No license, expressly or implied, is granted hereby under any intellectual property rights or other rights of ROHM or any third parties with respect to the Products or the information contained in this document. Provided, however, that ROHM will not assert its intellectual property rights or other rights against you or your customers to the extent necessary to manufacture or sell products containing the Products, subject to the terms and conditions herein.

Other Precaution

1. This document may not be reprinted or reproduced, in whole or in part, without prior written consent of ROHM.

2. The Products may not be disassembled, converted, modified, reproduced or otherwise changed without prior written consent of ROHM.

3. In no event shall you use in any way whatsoever the Products and the related technical information contained in the Products or this document for any military purposes, including but not limited to, the development of mass-destruction weapons.

4. The proper names of companies or products described in this document are trademarks or registered trademarks of ROHM, its affiliated companies or third parties.

© 2015 ROHM Co., Ltd. All rights reserved.

General Precaution

1. Before you use our Products, you are requested to carefully read this document and fully understand its contents. ROHM shall not be in any way responsible or liable for failure, malfunction or accident arising from the use of any ROHM's Products against warning, caution or note contained in this document.

2. All information contained in this document is current as of the issuing date and subject to change without any prior notice. Before purchasing or using ROHM's Products, please confirm the latest information with a ROHM sales representative.

3. The information contained in this document is provided on an "as is" basis and ROHM does not warrant that all information contained in this document is accurate and/or error-free. ROHM shall not be in any way responsible or liable for any damages, expenses or losses incurred by you or third parties resulting from inaccuracy or errors of or concerning such information.

© 2015 ROHM Co., Ltd. All rights reserved.

Mouser Electronics

Authorized Distributor

Click to View Pricing, Inventory, Delivery & Lifecycle Information:

ROHM Semiconductor:

BM6101FV-CE2