General-Purpose 6ch Electronic Volume with Built-in Advanced Switch

BD3461FS

General Description

BD3461FS is a 6ch electronic volume which has the best audio efficiency in the industry. It has an external sound mixing function (with volume) in the favorite channel for mixing of portable audio and car navigation's guide sound. Also, BD3461FS has a volume switching shock sound prevention technique called "Advanced Switch," supporting the construction of high quality car audio space by simple control.

Features

- Reduce switching noise of volume by using Advanced Switch circuit.
- Mixing for external sound monaural 3ch. It is possible that is mixed to front/Rear/Sub output Lch/Rch independently.
- Built-in 3ch ATT for external sound mixing that can be controlled independently.
- Built-in buffered ground isolation amplifier inputs, ideal for external input.
- Energy-saving design resulting in low-current consumption by utilizing the Bi-CMOS process. It has the advantage in quality over scaling down the power heat control of internal regulators.
- Arranges all I/O terminals together for easier PCB layout and smaller PCB area.
- I^2C BUS can be controlled by 3.3V / 5V.

Applications

It is optimal for car audio. It can also be used for car navigation, audio equipment of mini Compo, micro Compo, DVD, TV, etc.

Key Specifications

- Power Supply Voltage Range: 7.0V to 9.5V
- Circuit Current (no signal): 25mA(Typ)
- Total Harmonic Distortion: 0.0004% (Typ)
- Maximum Input Voltage: 2.35Vrms (Typ)
- Cross-talk between Selectors: -105dB (Typ)
- Volume Control Range: +23dB to -79dB
- Output Noise Voltage: 1.9µVrms(Typ)
- Residual Output Noise Voltage: 1.6µVrms (Typ)
- Operating Temperature Range: -40°C to +85°C

Package

W(Typ) x D(Typ) x H(Max)

SSOP-A24
10.00mm x 7.80mm x 2.10mm

Typical Application Circuit

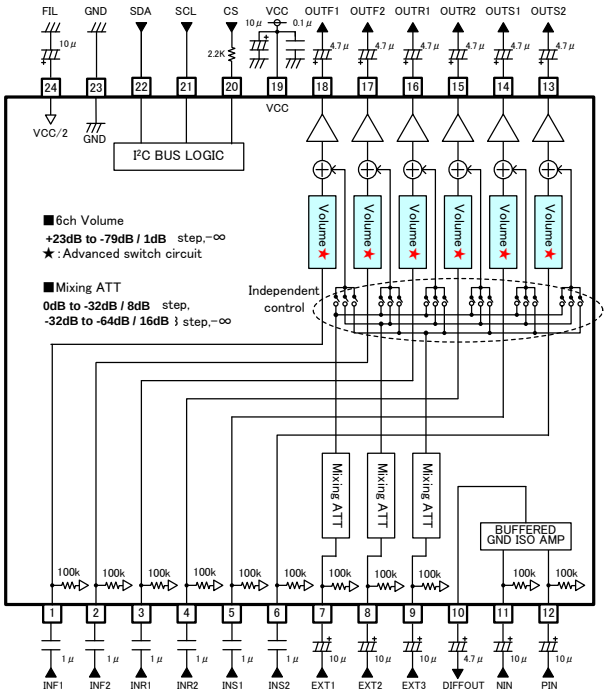

Unit
R : [Ω]
C : [F]

○Product structure : Silicon monolithic integrated circuit ○This product has no designed protection against radioactive rays

© 2015 ROHM Co., Ltd. All rights reserved.

Pin Configuration

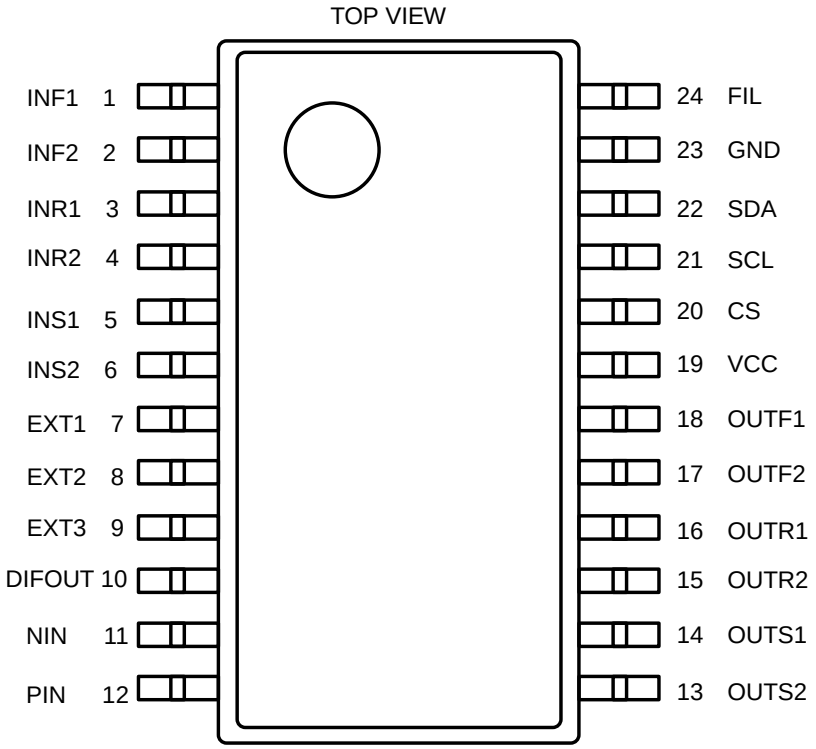

Pin Descriptions

Pin No.	Pin Name	Description	Pin No.	Pin Name	Description
1	INF1	1ch Front input terminal	13	OUTS2	2ch Subwoofer output terminal
2	INF2	2ch Front input terminal	14	OUTS1	1ch Subwoofer output terminal
3	INR1	1ch Rear input terminal	15	OUTR2	2ch Rear output terminal
4	INR2	2ch Rear input terminal	16	OUTR1	1ch Rear output terminal
5	INS1	1ch Subwoofer input terminal	17	OUTF2	2ch Front output terminal
6	INS2	2ch Subwoofer input terminal	18	OUTF1	1ch Front output terminal
7	EXT1	1ch External input terminal	19	VCC	Power supply terminal
8	EXT2	2ch External input terminal	20	CS	Chip select terminal
9	EXT3	3ch External input terminal	21	SCL	I^2C Communication clock terminal
10	DIFOUT	DIFF amp output terminal	22	SDA	I^2C Communication data terminal
11	NIN	DIFF amp negative input terminal	23	GND	GND terminal
12	PIN	DIFF amp positive input terminal	24	FIL	VCC/2 terminal

© 2015 ROHM Co., Ltd. All rights reserved.

Block Diagram

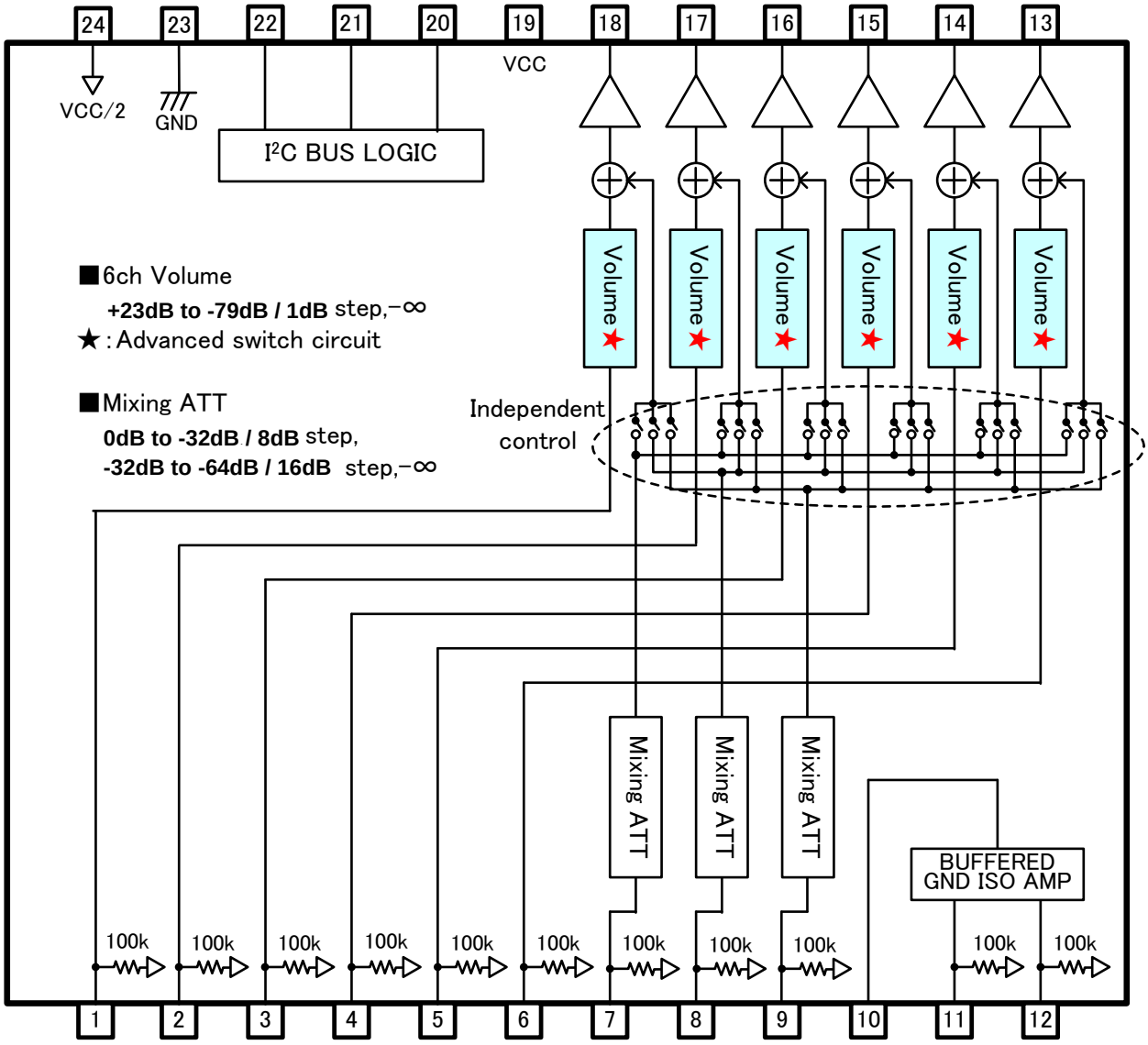

© 2015 ROHM Co., Ltd. All rights reserved.

Absolute Maximum Ratings (Ta=25°C)

Parameter	Symbol	Rating	Unit
Power Supply Voltage	V_{CC}	10.0V	V
Input Voltage	V_{IN}	V_{CC}+0.3 to GND-0.3	V
Power Dissipation	Pd	1 (Note 1)	W
Storage Temperature	Tstg	-55 to +150	°C

(Note 1) This value decreases 8mW/°C for Ta=25°C or more.
ROHM standard board shall be mounted. Thermal resistance θja = 125(°C/W).
ROHM standard board Size : 70 x 70 x 1.6 (mm^3)
Material : FR4 grass epoxy board (3% or less of copper foil area)

Caution: Operating the IC over the absolute maximum ratings may damage the IC. The damage can either be a short circuit between pins or an open circuit between pins and the internal circuitry. Therefore, it is important to consider circuit protection measures, such as adding a fuse, in case the IC is operated over the absolute maximum ratings.

Recommended Operating Conditions

Parameter	Symbol	Rating	Unit
Power Supply Voltage	V_{CC}	7.0 to 9.5	V
Temperature	Topr	-40 to +85	°C

Electrical Characteristics

(Unless specified, Ta=25°C, V_{CC}=8.5V, f=1kHz, V_{IN}=1Vrms, Rg=600Ω, R_L=10kΩ, INF1 input, Volume 0dB)

BLOCK	Parameter	Symbol	Limit			Unit	Conditions
			Min	Typ	Max		
GENERAL	Circuit Current (no signal)	I_Q	-	25	40	mA	No signal
	Voltage Gain	G_V	-1.5	0	+1.5	dB	G_V=20log(V_{OUT}/V_{IN})
	Channel Balance	CB	-1.5	0	+1.5	dB	CB=G_{V1}-G_{V2}
	Total Harmonic Distortion	THD	-	0.0004	0.05	%	V_{OUT}=1Vrms BW=400Hz-30kHz
	Output Noise Voltage *	V_{NO}	-	1.9	10	μVrms	Rg=0Ω BW=IHF-A
	Residual Output Noise Voltage *	V_{NOR}	-	1.6	10	μVrms	Volume=-∞dB Rg=0Ω BW=IHF-A
	Cross-talk between Channels *	CTC	-	-105	-90	dB	Rg=0Ω CTC=20log(V_{OUT}/V_{IN}) BW=IHF-A
	Ripple Rejection	RR	-	-80	-40	THD	f=100Hz V_{RR}=100mVrms RR=20log(V_{OUT}/V_{CC}IN)
DIFF	Input Impedance	R_{IN_D}	70	100	130	kΩ	
	Common Mode Rejection Ratio *	CMRR	50	65	-	dB	PIN and NIN input CMRR=20log10(V_{IN}/V_{OUT}) BW=IHF-A

© 2015 ROHM Co., Ltd. All rights reserved.

Electrical Characteristics – continued

(Unless specified, Ta=25°C, V_{CC}=8.5V, f=1kHz, V_{IN}=1Vrms, Rg=600Ω, R_L=10kΩ, INF1 input, Volume 0dB)

BLOCK	Parameter	Symbol	Limit			Unit	Conditions
			Min	Typ	Max		
VOLUME	Input Impedance	R_{IN_V}	70	100	130	kΩ	
	Maximum Input Voltage	V_{IM}	2	2.35	-	Vrms	V_{IM} at THD+N(V_{OUT})=1% BW=400Hz-30kHz
	Maximum Gain	G_{V_BST}	21	23	25	dB	Gain=23dB V_{IN}=100mVrms G_V=20log(V_{OUT}/V_{IN})
	Maximum Attenuation *	G_{V_MIN}	-	-109	-90	dB	Volume=-∞dB G_V=20log(V_{OUT}/V_{IN}) BW=IHF-A
	Step Resolution	G_{V_STEP}	-	1	-	dB	GAIN&ATT=+23dB to -79dB
	Gain Set Error	G_{V_ERR}	-2	0	+2	dB	Gain=+1dB to +23dB
	Attenuation Set Error 1	G_{V_ERR1}	-2	0	+2	dB	ATT=-1dB to -15dB
	Attenuation Set Error 2	G_{V_ERR2}	-3	0	+3	dB	ATT=-16dB to -47dB
	Attenuation Set Error 3	G_{V_ERR3}	-4	0	+4	dB	ATT=-48dB to -79dB
	Output Impedance	R_{OUT}	-	-	50	Ω	V_{IN} =100mVrms
	Maximum Output Voltage	V_{OM}	2	2.35	-	Vrms	THD+N=1% BW=400Hz-30kHz
MIXING ATT	Input Impedance	R_{IN_M}	70	100	130	kΩ	
	Maximum Attenuation *	G_{M_MIN}	-	-90	-	dB	G_M=20log(V_{OUT}/V_{IN}) BW=IHF-A, ATT=-∞dB
	Step Resolution 1	G_{M_STEP1}	-	8	-	dB	ATT=0dB to -32dB
	Step Resolution 2	G_{M_STEP2}	-	16	-	dB	ATT=-32dB to -64dB

VP-9690A (Average value detection, effective value display) filter by Matsushita Communication is used for * measurement.
Phase between input / output is same.

© 2015 ROHM Co., Ltd. All rights reserved.

Typical Performance Curves

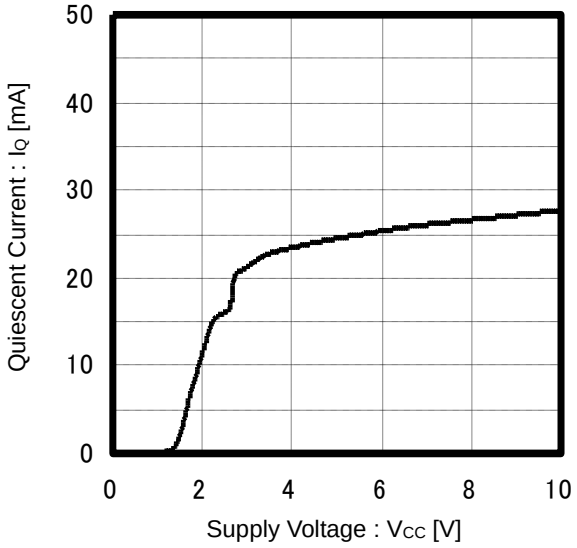

Figure 1. Quiescent Current vs Supply Voltage

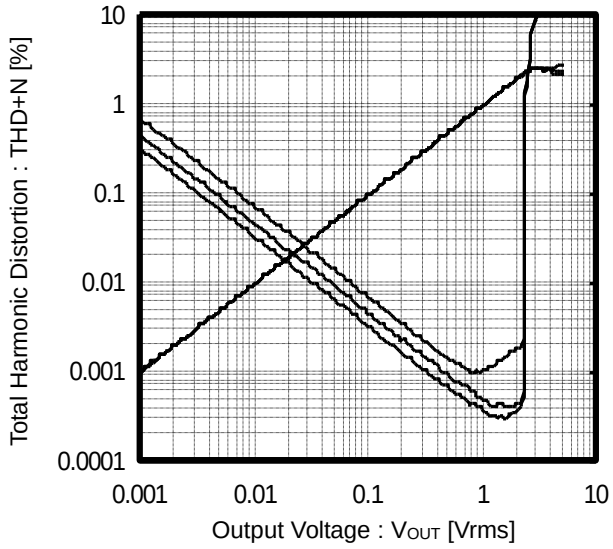

Figure 2. Total Harmonic Distortion vs Output Voltage

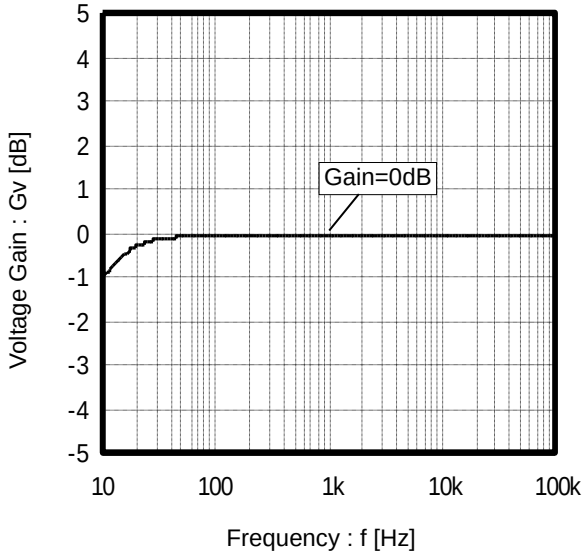

Figure 3. Voltage Gain vs Frequency

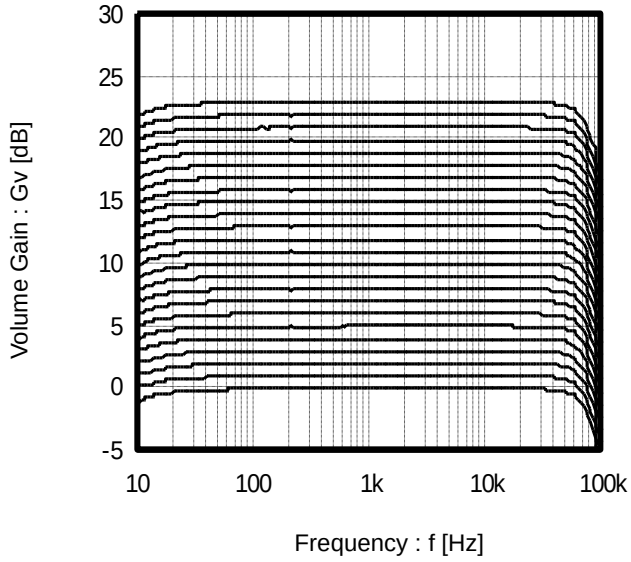

Figure 4. Volume Gain vs Frequency (0dB to +23dB)

© 2015 ROHM Co., Ltd. All rights reserved.

Typical Performance Curves – continued

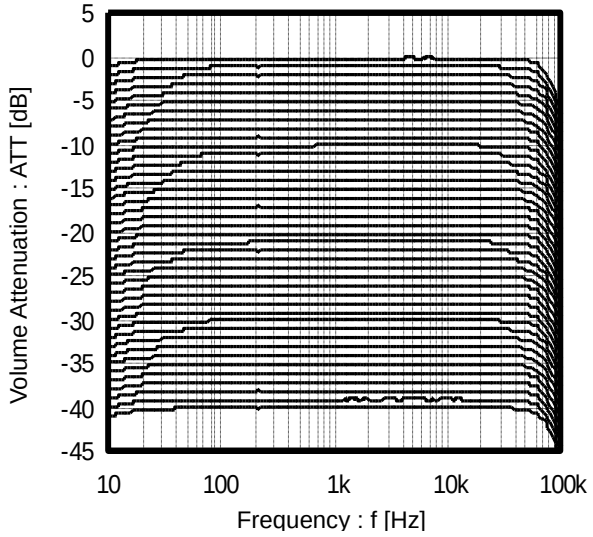

Figure 5. Volume Gain vs Frequency 1
(+0dB to -40dB)

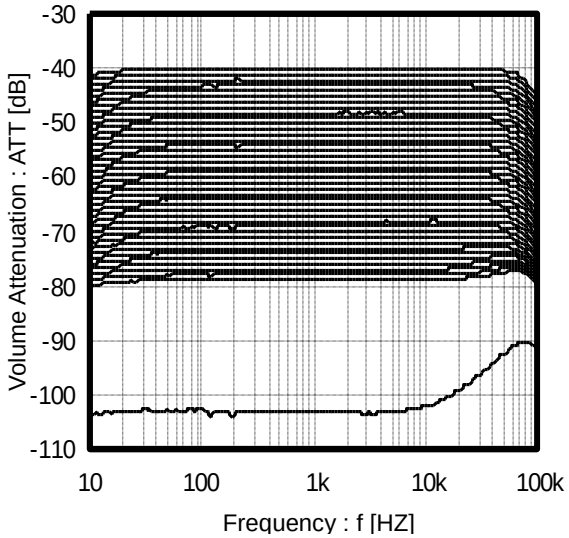

Figure 6. Volume Gain vs Frequency 2
(-41dB to -79dB)

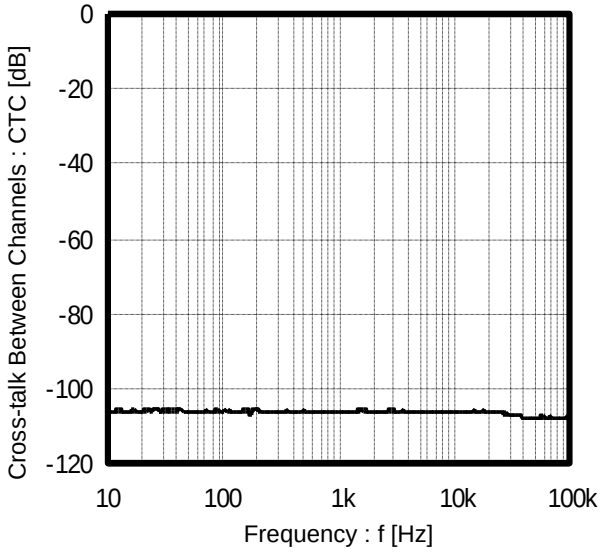

Figure 7. Cross-Talk Between Channels vs Frequency

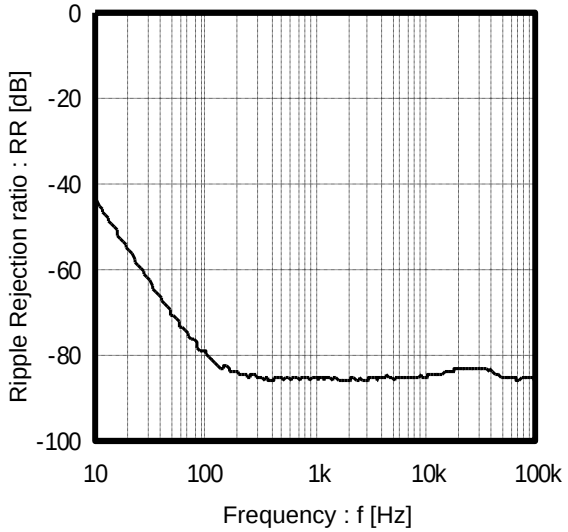

Figure 8. Ripple Rejection Ratio vs Frequency

© 2015 ROHM Co., Ltd. All rights reserved.

Typical Performance Curves – continued

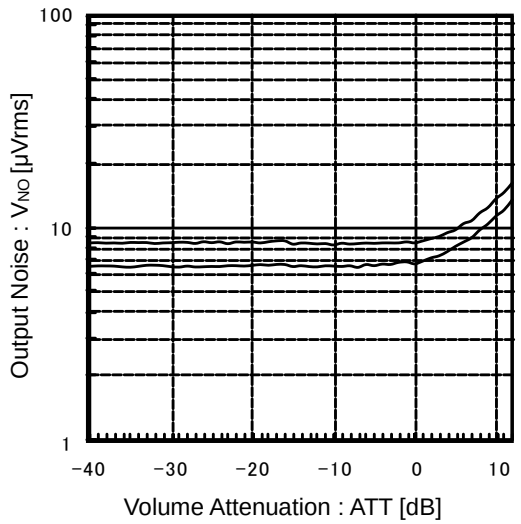

Figure 9. Output Noise vs Volume Attenuation

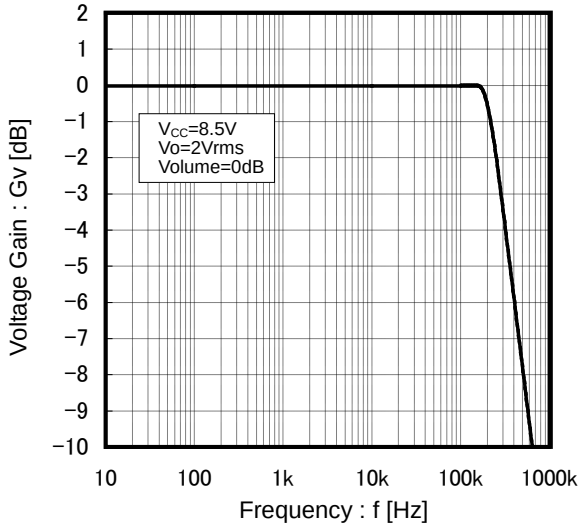

Figure 10. Volume Gain of Large Output Level vs Frequency

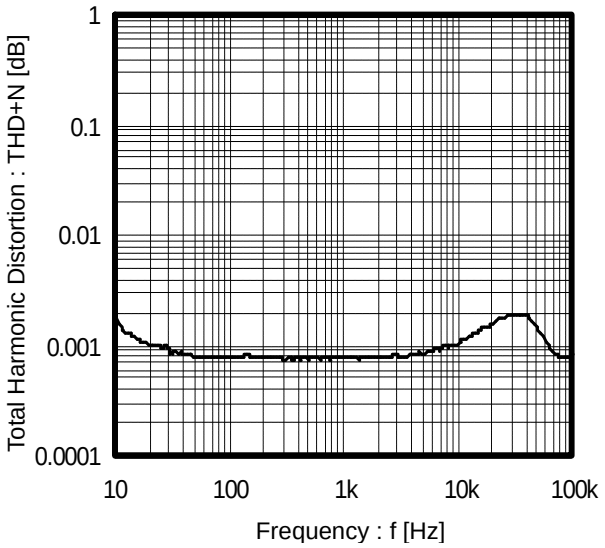

Figure 11. Total Harmonic Distortion vs Frequency

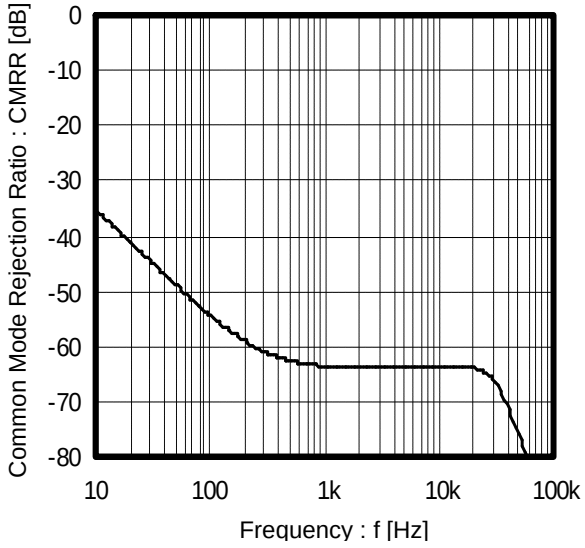

Figure 12. Common Mode Rejection Ratio vs Frequency

© 2015 ROHM Co., Ltd. All rights reserved.

Typical Performance Curves – continued

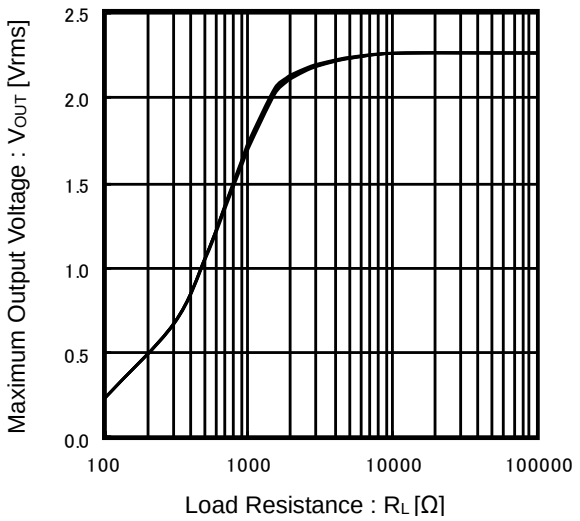

Figure 13. Maximum Output Voltage vs Load Resistance

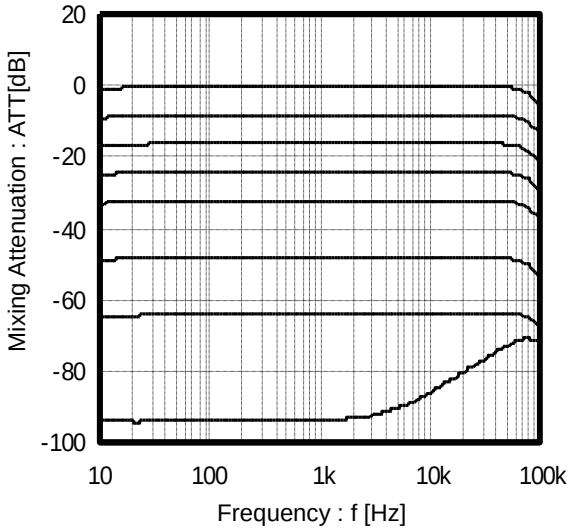

Figure 14. Mixing Attenuation vs Frequency

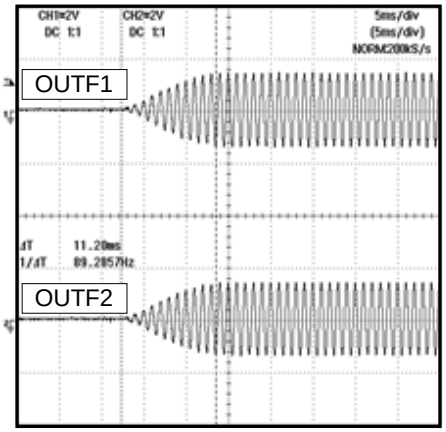

Figure 15. Advanced Switch 1

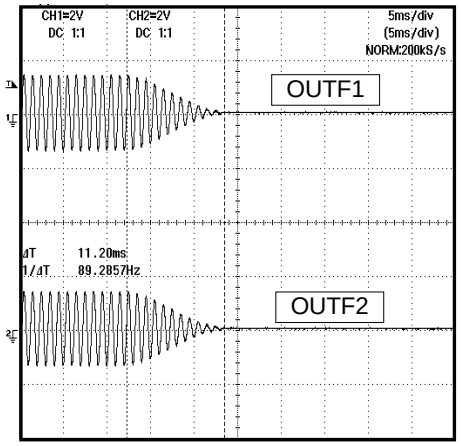

Figure 16. Advanced Switch 2

© 2015 ROHM Co., Ltd. All rights reserved.

Timing Chart

CONTROL SIGNAL SPECIFICATIONS

(1) Electrical Specifications and Timing for Bus Lines and I/O Stages

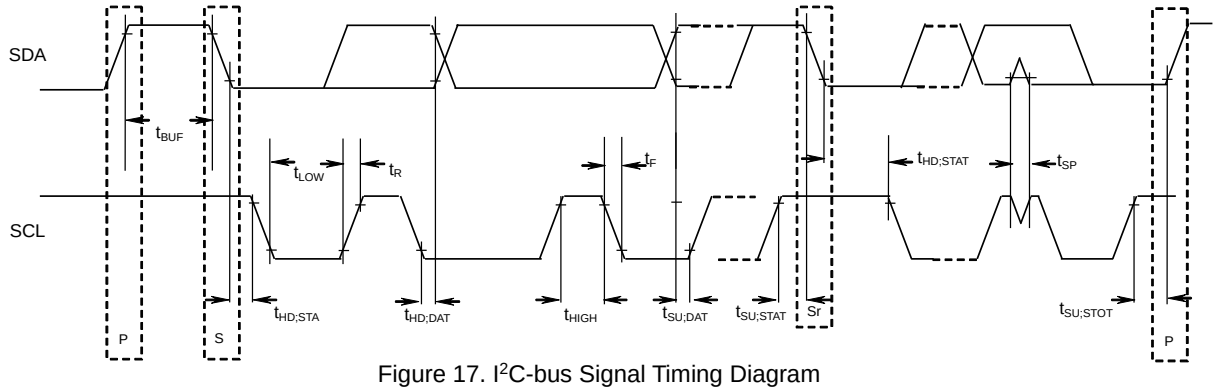

Figure 17. I²C-bus Signal Timing Diagram

Table 1 Characteristics of the SDA and SCL bus lines for I²C-bus devices
(Unless specified, Ta=25°C, V_{CC}=8.5V)

	Parameter	Symbol	Fast-mode I²C-bus		Unit
			Min	Max	
1	SCL clock frequency	f_{SCL}	0	400	kHz
2	Bus free time between a STOP and START condition	t_{BUF}	1.3	-	μS
3	Hold time (repeated) START condition. After this period, the first clock pulse is generated	$t_{HD;STA}$	0.6	-	μS
4	LOW period of the SCL clock	t_{LOW}	1.3	-	μS
5	HIGH period of the SCL clock	t_{HIGH}	0.6	-	μS
6	Set-up time for a repeated START condition	$t_{SU;STA}$	0.6	-	μS
7	Data hold time	$t_{HD;DAT}$	0 (Note)	-	μS
8	Data set-up time	$t_{SU;DAT}$	100	-	ns
9	Set-up time for STOP condition	$t_{SU;STO}$	0.6	-	μS

All values referred to VIH Min and VIL Max Levels (see Table 2).
(Note) To avoid sending right after the fall-edge of SCL (VIH min of the SCL signal), the transmitter sets a holding time of 300ns or more for the SDA signal. About 7($t_{HD;DAT}$), 8($t_{SU;DAT}$), make it the setup which a margin is fully in.

Table 2 Characteristics of the SDA and SCL I/O stages for I²C-bus devices

	Parameter	Symbol	Fast-mode devices		Unit
			Min	Max	
10	LOW level input voltage	V_{IL}	-0.5	+1	V
11	HIGH level input voltage	V_{IH}	2.3	-	V
12	Pulse width of spikes which must be suppressed by the input filter.	t_{SP}	0	50	ns
13	LOW level output voltage (open drain or open collector) at 3mA sink current	V_{OL1}	0	0.4	V
14	Input current of each I/O pin with an input voltage between 0.4V and 4.5V	I_I	-10	+10	μA

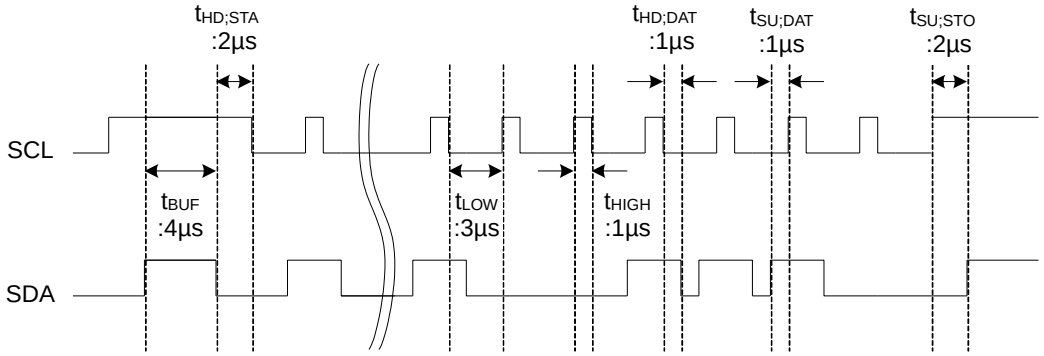

SCL clock frequency : 250 kHz

Figure 18. I²C Command Data Transmission Timing Diagram

© 2015 ROHM Co., Ltd. All rights reserved.

(2) I²C BUS FORMAT

	MSB LSB		MSB LSB		MSB LSB		
S	Slave Address	A	Select Address	A	Data	A	P
1bit	8bit	1bit	8bit	1bit	8bit	1bit	1bit

S = Start condition (Recognition of start bit)
Slave Address = Recognition of slave address. The first 7 bits correspond to the slave address. The least significant bit is "L" which corresponds to write mode.
A = ACKNOWLEDGE bit (Recognition of acknowledgement)
Select Address = Select address corresponding to volume, bass or treble.
Data = Data on every volume and tone.
P = Stop condition (Recognition of stop bit)

(3) I²C BUS Interface Protocol

(a) Basic Format

S	Slave Address	A	Select Address	A	Data	A	P
	MSB LSB		MSB LSB		MSB LSB		

(b) Automatic Increment (Select Address increases (+1) according to the number of data.)

S	Slave Address	A	Select Address	A	Data1	A	Data2	A	· · · ·	DataN	A	P
	MSB LSB		MSB LSB		MSB LSB		MSB LSB			MSB LSB		

(Example) ① Data1 shall be set as data of address specified by Select Address.
② Data2 shall be set as data of address specified by Select Address +1.
③ DataN shall be set as data of address specified by Select Address +N-1.

(c) Configuration Unavailable for Transmission (In this case, only Select Address1 is set.)

S	Slave Address	A	Select Address1	A	Data	A	Select Address 2	A	Data	A	P
	MSB LSB		MSB LSB		MSB LSB		MSB LSB		MSB LSB		

(Note) If any data is transmitted as Select Address 2 next to data, it is recognized as data, not as Select Address 2.

(4) Slave Address

Because the slave address can be changed by the setting of CS, it is possible to use two chips at the same time on identical BUS.

	MSB							LSB	
SEL Voltage Condition	A6	A5	A4	A3	A2	A1	A0	R/W	
GND to 0.2 x V_{CC}	1	0	0	0	0	0	0	0	80H
0.8 x V_{CC} to V_{CC}	1	0	0	0	0	1	0	0	84H

Establish the CS voltage to define the setting.

© 2015 ROHM Co., Ltd. All rights reserved.

(5) Select Address & Data

Items to be set	Select Address (hex)	MSB	Data						LSB
		D7	D6	D5	D4	D3	D2	D1	D0
Initial Setup 1	01	0	0	0	0	0	1	0	0
Volume 1ch Front	28	Volume Gain / Attenuation							
Volume 2ch Front	29	Volume Gain / Attenuation							
Volume 1ch Rear	2A	Volume Gain / Attenuation							
Volume 2ch Rear	2B	Volume Gain / Attenuation							
Volume 1ch Sub	2C	Volume Gain / Attenuation							
Volume 2ch Sub	2D	Volume Gain / Attenuation							
EXT 1 ON/OFF	30	EXT1 S2	EXT1 S1	EXT1 R2	EXT1 R1	EXT1 F2	EXT1 F1	0	0
EXT 2 ON/OFF	31	EXT2 S2	EXT2 S1	EXT2 R2	EXT2 R1	EXT2 F2	EXT2 F1	0	0
EXT 3 ON/OFF	32	EXT3 S2	EXT3 S1	EXT3 R2	EXT3 R1	EXT3 F2	EXT3 F1	0	0
EXT 1 ATT	33	0	0	0	0	0	EXT1 Attenuation		
EXT 2 ATT	34	0	0	0	0	0	EXT2 Attenuation		
EXT 3 ATT	35	0	0	0	0	0	EXT3 Attenuation		
Test Mode	F0	0	0	0	0	0	0	0	0
System Reset	FE	1	0	0	0	0	0	0	1

Advanced Switch

(Note)

1. The Advanced Switch works in the latch part while changing from one function to another.

2. Upon continuous data transfer, the Select Address rolls over because of the automatic increment function, as shown below.

→01→28→29→2A→2B→2C→2D→30→31→32→33→34→35

3. Changing “EXT = ON/OFF” and “EXT Atteuation”, does not correspond for advance switch. Therefore, please do the measure that applies mute on the side of a set.

© 2015 ROHM Co., Ltd. All rights reserved.

Select address 28, 29, 2A, 2B, 2C, 2D(hex)

Gain & ATT	MSB	Volume Gain/Attenuation						LSB
	D7	D6	D5	D4	D3	D2	D1	D0
Prohibition (Note)	0	0	0	0	0	0	0	0
	0	0	0	0	0	0	0	1
	:	:	:	:	:	:	:	:
	0	1	1	0	1	0	0	0
23dB	0	1	1	0	1	0	0	1
22dB	0	1	1	0	1	0	1	0
21dB	0	1	1	0	1	0	1	1
:	:	:	:	:	:	:	:	:
-78dB	1	1	0	0	1	1	1	0
-78dB	1	1	0	0	1	1	1	0
-79dB	1	1	0	0	1	1	1	1
Prohibition (Note)	1	1	0	1	0	0	0	0
	:	:	:	:	:	:	:	:
	1	1	1	1	1	1	1	0
-∞dB	1	1	1	1	1	1	1	1

(Note) Gain is set to "-∞dB" when sending "Prohibition data".

Select address 30, 31, 32(hex)

MODE	MSB	EXT1 F1						LSB
	D7	D6	D5	D4	D3	D2	D1	D0
OFF	EXT1 S2	EXT1 S1	EXT1 R2	EXT1 R1	EXT1 F2	0	0	0
ON						1		

MODE	MSB	EXT1 F2						LSB
	D7	D6	D5	D4	D3	D2	D1	D0
OFF	EXT1 S2	EXT1 S1	EXT1 R2	EXT1 R1	0	EXT1 F1	0	0
ON					1			

MODE	MSB	EXT1 R1						LSB
	D7	D6	D5	D4	D3	D2	D1	D0
OFF	EXT1 S2	EXT1 S1	EXT1 R2	0	EXT1 F2	EXT1 F1	0	0
ON				1				

MODE	MSB	EXT1 R2						LSB
	D7	D6	D5	D4	D3	D2	D1	D0
OFF	EXT1 S2	EXT1 S1	0	EXT1 R1	EXT1 F2	EXT1 F1	0	0
ON			1					

MODE	MSB	EXT1 S1						LSB
	D7	D6	D5	D4	D3	D2	D1	D0
OFF	EXT1 S2	0	EXT1 R2	EXT1 R1	EXT1 F2	EXT1 F1	0	0
ON		1						

MODE	MSB	EXT1 S2						LSB
	D7	D6	D5	D4	D3	D2	D1	D0
OFF	0	EXT1 S1	EXT1 R2	EXT1 R1	EXT1 F2	EXT1 F1	0	0
ON	1							

:Initial condition

© 2015 ROHM Co., Ltd. All rights reserved.

Select address 33, 34, 35(hex)

Gain	MSB	EXT Attenuation						LSB
	D7	D6	D5	D4	D3	D2	D1	D0
0dB	0	0	0	0	0	0	0	0
-8dB						0	0	1
-16dB						0	1	0
-24dB						0	1	1
-32dB						1	0	0
-48dB						1	0	1
-64dB						1	1	0
-∞dB						1	1	1

:Initial condition

(6) About Power ON Reset

Initialization inside IC is carried out at one of supply voltage circuits. Initial data is sent to all addresses at supply voltage on. Mute is ON until this initial data is sent.

Parameter	Symbol	Limit			Unit	Conditions
		Min	Typ	Max		
Rise Time of VCC	t_{RISE}	20	-	-	μsec	V_{CC} rise time from 0V to 3V
VCC Voltage of Release Power ON Reset	V_{POR}	-	4.1	-	V	

© 2015 ROHM Co., Ltd. All rights reserved.

Application Information

1. Volume Gain/Attenuation of the details

(dB)	D7	D6	D5	D4	D3	D2	D1	D0		(dB)	D7	D6	D5	D4	D3	D2	D1	D0
+23	0	1	1	0	1	0	0	1		-29	1	0	0	1	1	1	0	1
+22	0	1	1	0	1	0	1	0		-30	1	0	0	1	1	1	1	0
+21	0	1	1	0	1	0	1	1		-31	1	0	0	1	1	1	1	1
+20	0	1	1	0	1	1	0	0		-32	1	0	1	0	0	0	0	0
+19	0	1	1	0	1	1	0	1		-33	1	0	1	0	0	0	0	1
+18	0	1	1	0	1	1	1	0		-34	1	0	1	0	0	0	1	0
+17	0	1	1	0	1	1	1	1		-35	1	0	1	0	0	0	1	1
+16	0	1	1	1	0	0	0	0		-36	1	0	1	0	0	1	0	0
+15	0	1	1	1	0	0	0	1		-37	1	0	1	0	0	1	0	1
+14	0	1	1	1	0	0	1	0		-38	1	0	1	0	0	1	1	0
+13	0	1	1	1	0	0	1	1		-39	1	0	1	0	0	1	1	1
+12	0	1	1	1	0	1	0	0		-40	1	0	1	0	1	0	0	0
+11	0	1	1	1	0	1	0	1		-41	1	0	1	0	1	0	0	1
+10	0	1	1	1	0	1	1	0		-42	1	0	1	0	1	0	1	0
+9	0	1	1	1	0	1	1	1		-43	1	0	1	0	1	0	1	1
+8	0	1	1	1	1	0	0	0		-44	1	0	1	0	1	1	0	0
+7	0	1	1	1	1	0	0	1		-45	1	0	1	0	1	1	0	1
+6	0	1	1	1	1	0	1	0		-46	1	0	1	0	1	1	1	0
+5	0	1	1	1	1	0	1	1		-47	1	0	1	0	1	1	1	1
+4	0	1	1	1	1	1	0	0		-48	1	0	1	1	0	0	0	0
+3	0	1	1	1	1	1	0	1		-49	1	0	1	1	0	0	0	1
+2	0	1	1	1	1	1	1	0		-50	1	0	1	1	0	0	1	0
+1	0	1	1	1	1	1	1	1		-51	1	0	1	1	0	0	1	1
0	1	0	0	0	0	0	0	0		-52	1	0	1	1	0	1	0	0
-1	1	0	0	0	0	0	0	1		-53	1	0	1	1	0	1	0	1
-2	1	0	0	0	0	0	1	0		-54	1	0	1	1	0	1	1	0
-3	1	0	0	0	0	0	1	1		-55	1	0	1	1	0	1	1	1
-4	1	0	0	0	0	1	0	0		-56	1	0	1	1	1	0	0	0
-5	1	0	0	0	0	1	0	1		-57	1	0	1	1	1	0	0	1
-6	1	0	0	0	0	1	1	0		-58	1	0	1	1	1	0	1	0
-7	1	0	0	0	0	1	1	1		-59	1	0	1	1	1	0	1	1
-8	1	0	0	0	1	0	0	0		-60	1	0	1	1	1	1	0	0
-9	1	0	0	0	1	0	0	1		-61	1	0	1	1	1	1	0	1
-10	1	0	0	0	1	0	1	0		-62	1	0	1	1	1	1	1	0
-11	1	0	0	0	1	0	1	1		-63	1	0	1	1	1	1	1	1
-12	1	0	0	0	1	1	0	0		-64	1	1	0	0	0	0	0	0
-13	1	0	0	0	1	1	0	1		-65	1	1	0	0	0	0	0	1
-14	1	0	0	0	1	1	1	0		-66	1	1	0	0	0	0	1	0
-15	1	0	0	0	1	1	1	1		-67	1	1	0	0	0	0	1	1
-16	1	0	0	1	0	0	0	0		-68	1	1	0	0	0	1	0	0
-17	1	0	0	1	0	0	0	1		-69	1	1	0	0	0	1	0	1
-18	1	0	0	1	0	0	1	0		-70	1	1	0	0	0	1	1	0
-19	1	0	0	1	0	0	1	1		-71	1	1	0	0	0	1	1	1
-20	1	0	0	1	0	1	0	0		-72	1	1	0	0	1	0	0	0
-21	1	0	0	1	0	1	0	1		-73	1	1	0	0	1	0	0	1
-22	1	0	0	1	0	1	1	0		-74	1	1	0	0	1	0	1	0
-23	1	0	0	1	0	1	1	1		-75	1	1	0	0	1	0	1	1
-24	1	0	0	1	1	0	0	0		-76	1	1	0	0	1	1	0	0
-25	1	0	0	1	1	0	0	1		-77	1	1	0	0	1	1	0	1
-26	1	0	0	1	1	0	1	0		-78	1	1	0	0	1	1	1	0
-27	1	0	0	1	1	0	1	1		-79	1	1	0	0	1	1	1	1
-28	1	0	0	1	1	1	0	0		-∞	1	1	1	1	1	1	1	1

: Initial condition

© 2015 ROHM Co., Ltd. All rights reserved.

2. Application Circuit Diagram

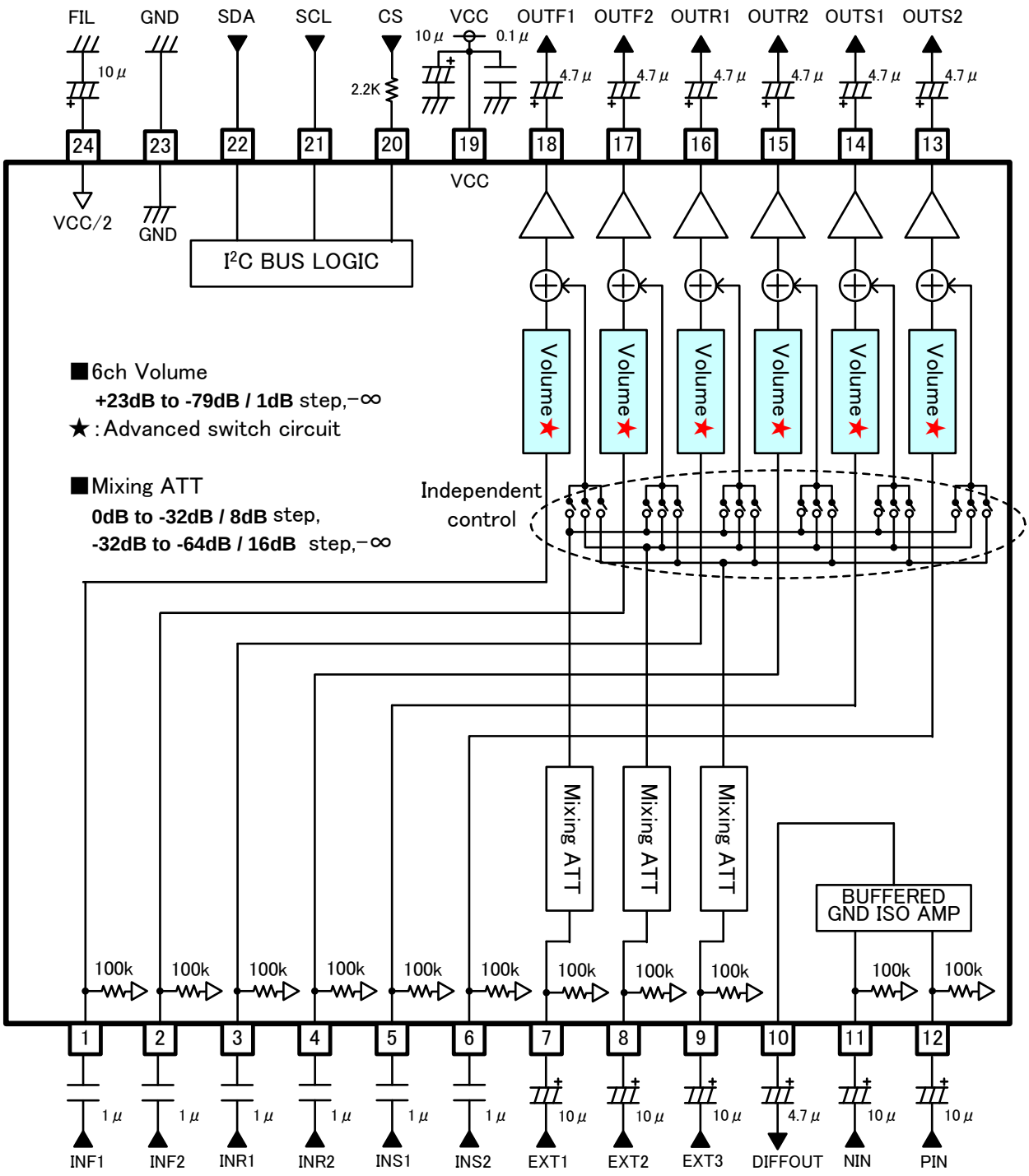

Figure 19. Application Circuit Diagram

Unit
R : [Ω]
C : [F]

Notes on wiring

①Please connect the decoupling capacitor of a power supply in the shortest distance as much as possible to GND.
②Lines of GND shall be one-point connected.
③Wiring pattern of Digital shall be away from that of analog unit and cross-talk shall not be acceptable.
④Lines of SCL and SDA of I²C BUS shall not be parallel if possible.
The lines shall be shielded, if they are adjacent to each other.
⑤Lines of analog input shall not be parallel if possible. The lines shall be shielded, if they are adjacent to each other.

© 2015 ROHM Co., Ltd. All rights reserved.

Power Dissipation

About the thermal design by the IC

Characteristics of an IC have a great deal to do with the temperature at which it is used, and exceeding absolute maximum ratings may degrade and destroy elements. Careful consideration must be given to the heat of the IC from the two standpoints of immediate damage and long-term reliability of operation.

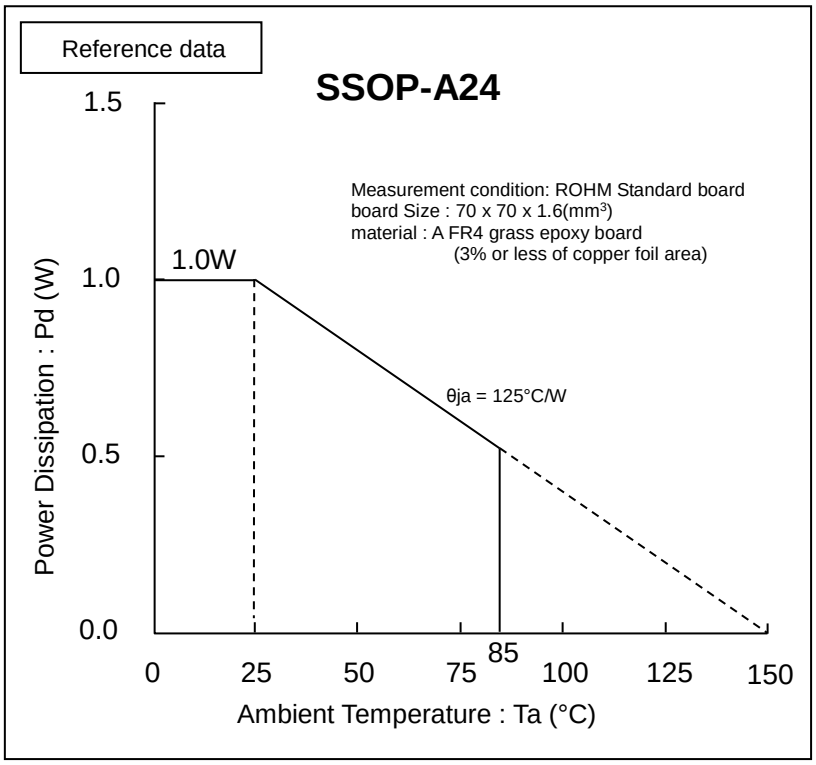

Figure 20. Temperature Derating Curve (SSOP-A24)

(Note) Values are actual measurements and are not guaranteed.
Power dissipation values vary according to the board on which the IC is mounted.

© 2015 ROHM Co., Ltd. All rights reserved.

I/O Equivalent Circuits

Terminal No.	Terminal Voltage	Equivalent Circuit	Terminal Description
INF1 INF2 INR1 INR2 INS1 INS2 NIN PIN EXT1 EXT2 EXT3	4.25	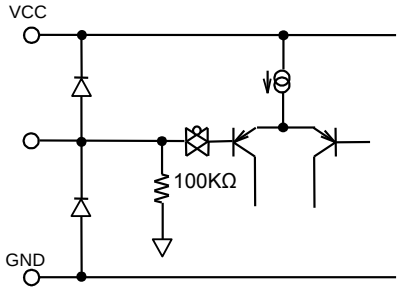	Signal input terminal. The input impedance is 100kΩ (typ).
DIFOUT OUTS2 OUTS1 OUTR2 OUTR1 OUTF2 OUTF1	4.25	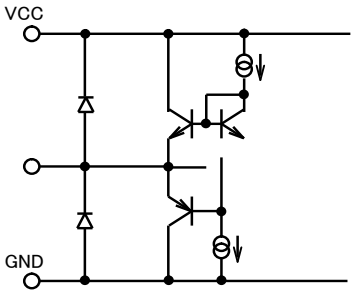	Fader output terminal.
CS	-	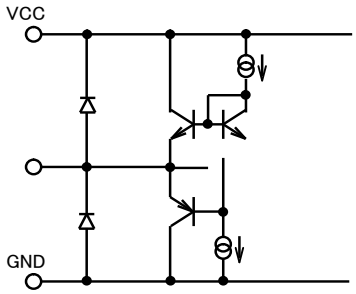	Slave address selection terminal. “CS” is “High” to slave address “84 H” “CS” is “Low” to slave address “80 H”

The values in the input/output equivalent circuits are reference values only and are not guaranteed.

© 2015 ROHM Co., Ltd. All rights reserved.

I/O Equivalent Circuits – continued

Terminal Name	Terminal Voltage	Equivalent Circuit	Terminal Description
VCC	8.5		Power supply terminal.
SCL	-	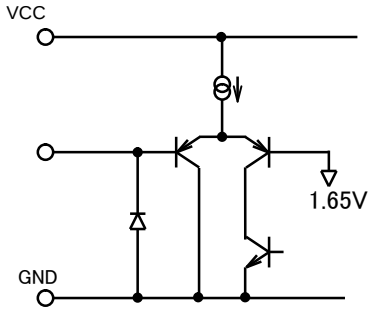	A terminal for clock input of I^2C BUS communication.
SDA	-	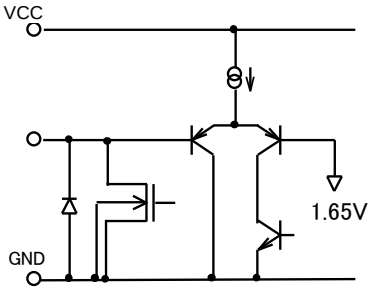	A terminal for data input of I^2C BUS communication.
GND	0		Ground terminal.
FIL	4.25	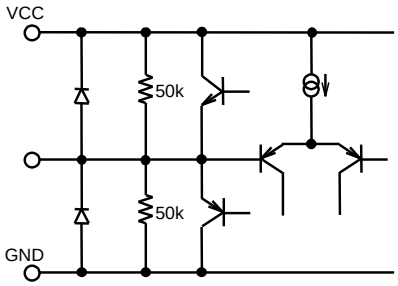	Voltage for reference bias of analog signal system. The simple precharge circuit and simple discharge circuit for an external capacitor are built in.

The values in the input/output equivalent circuits are reference values only and are not guaranteed.

© 2015 ROHM Co., Ltd. All rights reserved.

Operational Notes

1. **Reverse Connection of Power Supply**
   Connecting the power supply in reverse polarity can damage the IC. Take precautions against reverse polarity when connecting the power supply, such as mounting an external diode between the power supply and the IC's power supply pins.

2. **Power Supply Lines**
   Design the PCB layout pattern to provide low impedance supply lines. Separate the ground and supply lines of the digital and analog blocks to prevent noise in the ground and supply lines of the digital block from affecting the analog block. Furthermore, connect a capacitor to ground at all power supply pins. Consider the effect of temperature and aging on the capacitance value when using electrolytic capacitors.

3. **Ground Voltage**
   Ensure that no pins are at a voltage below that of the ground pin at any time, even during transient condition.

4. **Ground Wiring Pattern**
   When using both small-signal and large-current ground traces, the two ground traces should be routed separately but connected to a single ground at the reference point of the application board to avoid fluctuations in the small-signal ground caused by large currents. Also ensure that the ground traces of external components do not cause variations on the ground voltage. The ground lines must be as short and thick as possible to reduce line impedance.

5. **Thermal Consideration**
   Should by any chance the power dissipation rating be exceeded the rise in temperature of the chip may result in deterioration of the properties of the chip. In case of exceeding this absolute maximum rating, increase the board size and copper area to prevent exceeding the Pd rating.

6. **Recommended Operating Conditions**
   These conditions represent a range within which the expected characteristics of the IC can be approximately obtained. The electrical characteristics are guaranteed under the conditions of each parameter.

7. **Inrush Current**
   When power is first supplied to the IC, it is possible that the internal logic may be unstable and inrush current may flow instantaneously due to the internal powering sequence and delays, especially if the IC has more than one power supply. Therefore, give special consideration to power coupling capacitance, power wiring, width of ground wiring, and routing of connections.

8. **Operation Under Strong Electromagnetic Field**
   Operating the IC in the presence of a strong electromagnetic field may cause the IC to malfunction.

9. **Testing on Application Boards**
   When testing the IC on an application board, connecting a capacitor directly to a low-impedance output pin may subject the IC to stress. Always discharge capacitors completely after each process or step. The IC's power supply should always be turned off completely before connecting or removing it from the test setup during the inspection process. To prevent damage from static discharge, ground the IC during assembly and use similar precautions during transport and storage.

10. **Inter-pin Short and Mounting Errors**
    Ensure that the direction and position are correct when mounting the IC on the PCB. Incorrect mounting may result in damaging the IC. Avoid nearby pins being shorted to each other especially to ground, power supply and output pin. Inter-pin shorts could be due to many reasons such as metal particles, water droplets (in very humid environment) and unintentional solder bridge deposited in between pins during assembly to name a few.

11. **Unused Input Pins**
    Input pins of an IC are often connected to the gate of a MOS transistor. The gate has extremely high impedance and extremely low capacitance. If left unconnected, the electric field from the outside can easily charge it. The small charge acquired in this way is enough to produce a significant effect on the conduction through the transistor and cause unexpected operation of the IC. So unless otherwise specified, unused input pins should be connected to the power supply or ground line.

© 2015 ROHM Co., Ltd. All rights reserved.

Operational Notes – continued

12. Regarding the Input Pin of the IC

This monolithic IC contains P+ isolation and P substrate layers between adjacent elements in order to keep them isolated. P-N junctions are formed at the intersection of the P layers with the N layers of other elements, creating a parasitic diode or transistor. For example (refer to figure below):

When GND > Pin A and GND > Pin B, the P-N junction operates as a parasitic diode.
When GND > Pin B, the P-N junction operates as a parasitic transistor.

Parasitic diodes inevitably occur in the structure of the IC. The operation of parasitic diodes can result in mutual interference among circuits, operational faults, or physical damage. Therefore, conditions that cause these diodes to operate, such as applying a voltage lower than the GND voltage to an input pin (and thus to the P substrate) should be avoided.

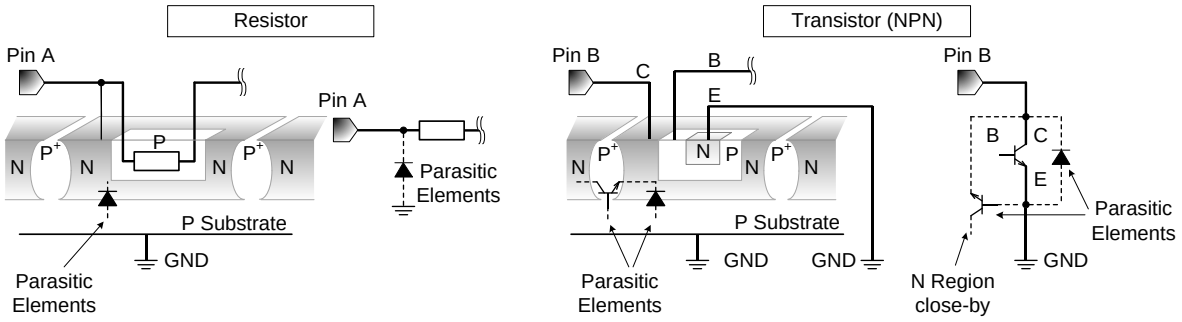

Figure 21. Example of monolithic IC structure

13. About a Signal Input Part

About Input Coupling Capacitor Constant Value

The constant value of input coupling capacitor C(F) is decided with respect to the input impedance R_{IN}(Ω) at the input signal terminal of the IC. The first HPF characteristic of RC is composed.

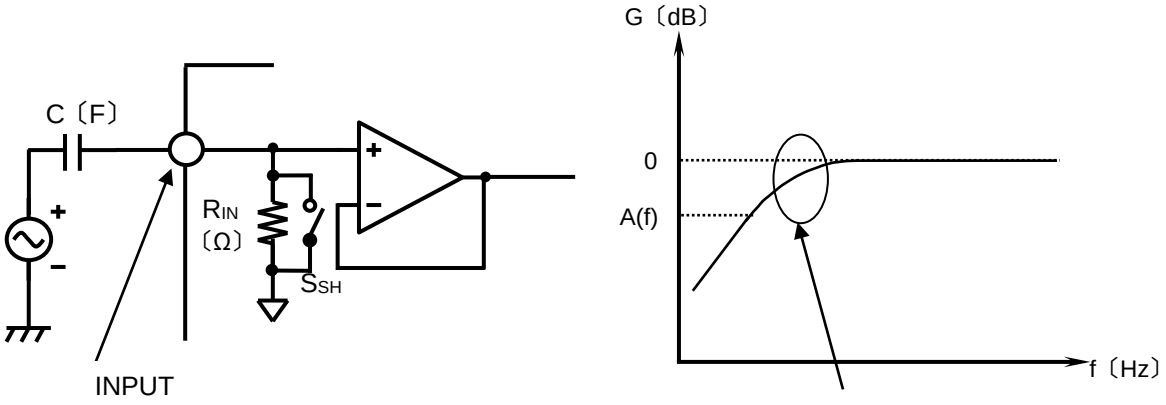

$$A(f) = \sqrt{\frac{(2\pi fCR_{IN})^2}{1+(2\pi fCR_{IN})^2}}$$

© 2015 ROHM Co., Ltd. All rights reserved.

Operational Notes – continued

14. About Output Load Characteristics

The usages of output load are below (reference). Please use more than 10[kΩ](TYP) load.

Output pin on target

Pin Name	Pin Name	Pin Name	Pin Name
OUTF1	OUTR1	OUTS1	DIFOUT
OUTF2	OUTR2	OUTS2	

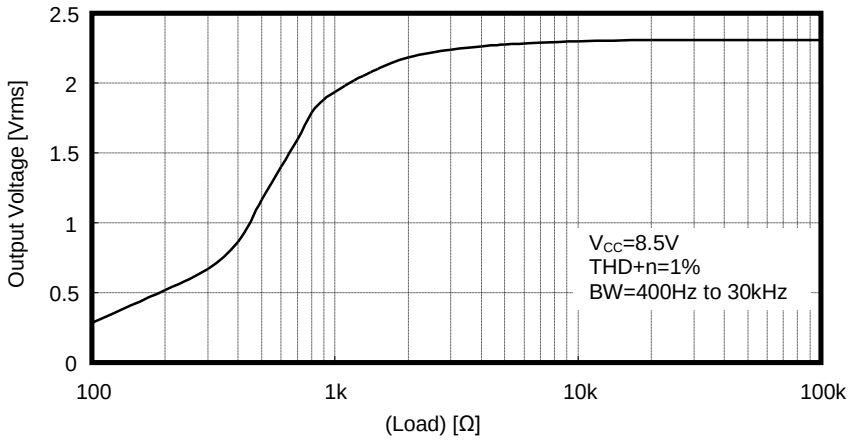

Output Load Characteristic at V_{CC}=8.5V. (Reference)

15. Frequency Characteristic at Large Output Level

High slew-rate amplifiers are used for high quality sound. This IC corresponds to “192kHz sampling on DVD-Audio” which is highest quality. Output level is “2Vrms, 192kHz flat(typ)”.
(See the below graph (reference)).

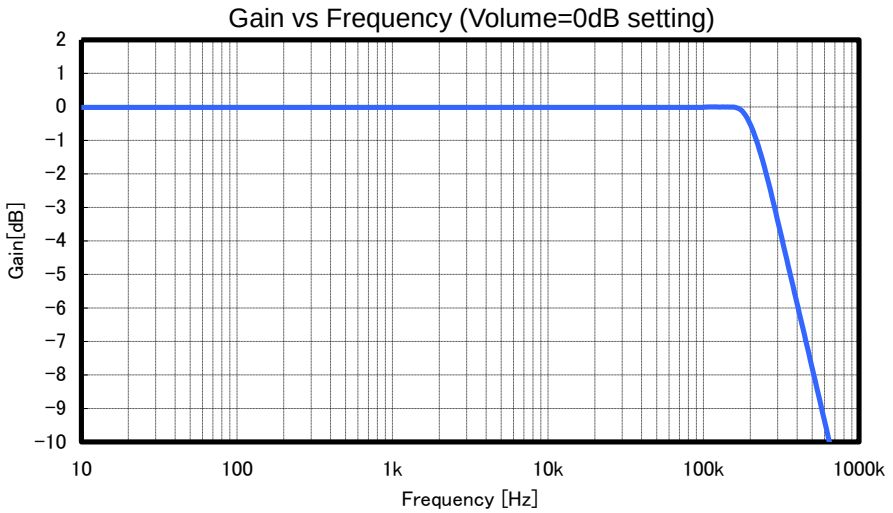

© 2015 ROHM Co., Ltd. All rights reserved.

Operational Notes – continued

16. Oscillation Countermeasure for GND Isolation Amplifier Outputs

Using higher capacitor than 10pF at GND isolation amplifier outputs (DIFOUT) may cause oscillation. As oscillation countermeasure, insert resistor in series to terminal directly as below.

Capacitance	Resistor in series to terminal directly
C < 10pF	Not necessary
10 < C < 100pF	220Ω

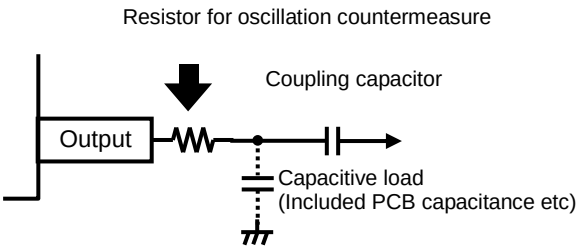

17. Oscillation Countermeasure for Volume Outputs at Power Supply ON/OFF

If using higher capacitor than 22pF at volume outputs, oscillation may occur for a moment when turning ON/OFF power supply (when V_{CC} is about 3V to 4V). As oscillation countermeasure, insert resistor in series to terminal directly as shown below, and set volume output to mute outside this device when turning ON/OFF power supply.

Capacitance	Resistor in series to terminal directly
C < 22pF	Not necessary
22 < C < 220pF	220Ω

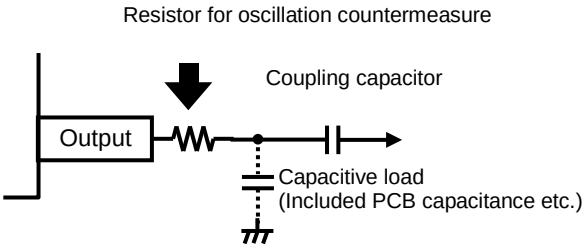

18. I²C BUS Transferring Data

[1] Types of Data Transfer

1.1 The data transfer without Advanced Switch (data transfer without data latching format) does not have regulations on transferring data.

1.2 The data transfer with Advanced Switch (data transfer with data latching format) does not have regulations on transferring data too. But Advanced Switch data transfer follows the order in [2].

[2] Advanced Switch Data Transfer

2-1. The timing chart of Advanced Switch data transfer is as follows.

■ Data Transfer Example 1

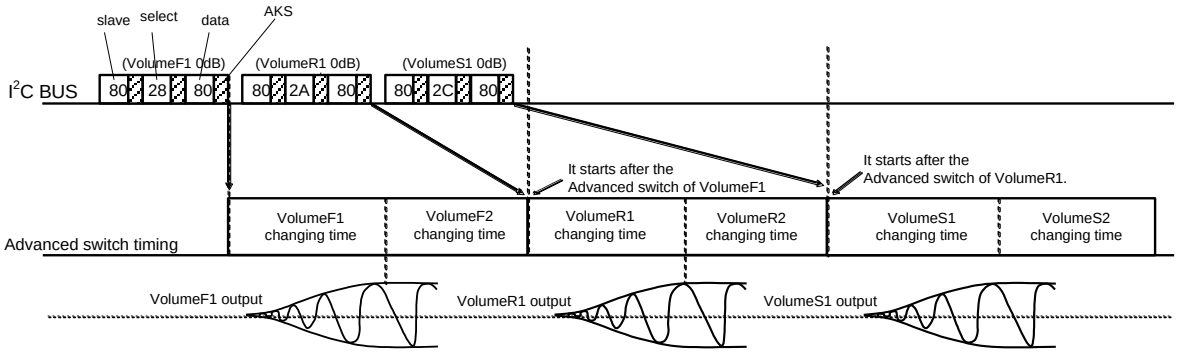

It is the same even if it transfers data in auto increment mode.

© 2015 ROHM Co., Ltd. All rights reserved.

Operational Notes – continued

There are no timing regulations in I²C BUS transferring data. But the changing time starts after the end of the present change. In addition, the timing of Advanced Switch is not dependent on transferring data turn. Instead, it follows the following turn.

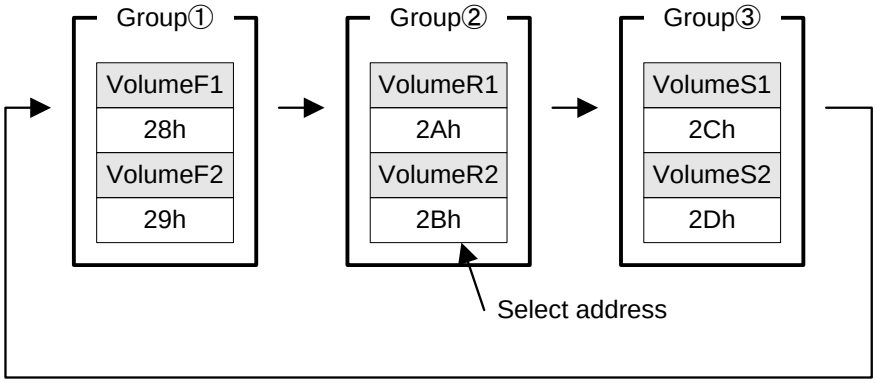

Advanced Switch Start Turn

(Note) The block in the same group can start the Advanced Switch at the same time.

■ Data Transfer Example 2

The data transfer turn differs from the actual change turn as shown below.

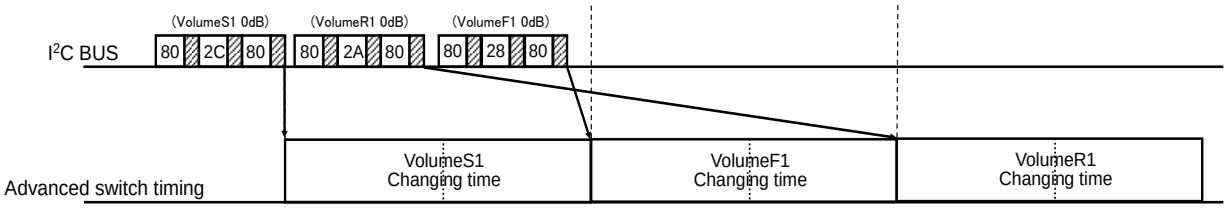

Please transfer data after the present Advanced Switch, if it wants to make a transferring data turn and Advanced Switch turn the same.

■ Data Transfer Example 3

Priority is given to the data of the same select address when it is transferred to the timing which Advanced Switch has not ended. In addition, when two or more data are transferred to the same select address, the end transferred data is effective.

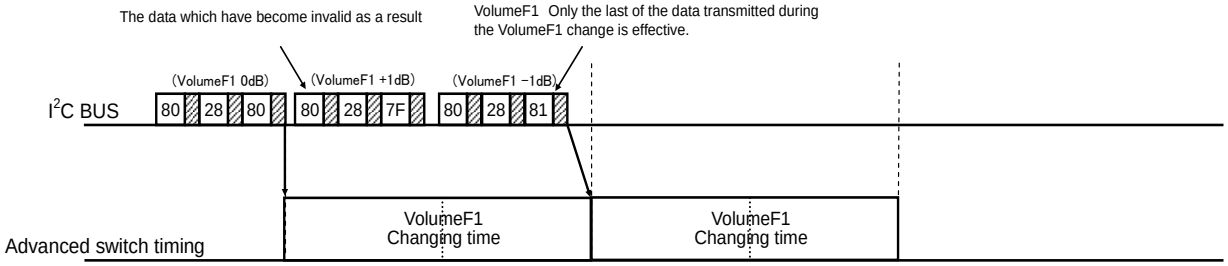

■Data Transfer Example 4

Refresh data is the same as the present setup data, therefore Advanced Switch does not change.

The gain change data of other channels are transferred after refresh data as shown below.

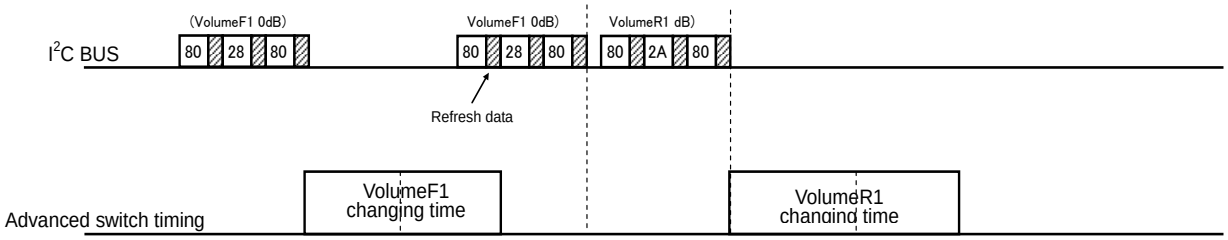

© 2015 ROHM Co., Ltd. All rights reserved.

Operational Notes – continued

[3] Attention of Transferring Data

BD3461FS cannot set the data transfer from a microcomputer correctly on very rare occasions. In such cases, the following phenomenon may occur.

1. Volume gain does not change.
2. Volume gain changes to MUTE.

Therefore, the data transfer from a microcomputer should send data as shown in the following conditions.

① When the Volume change data send, please send the same data twice as below.

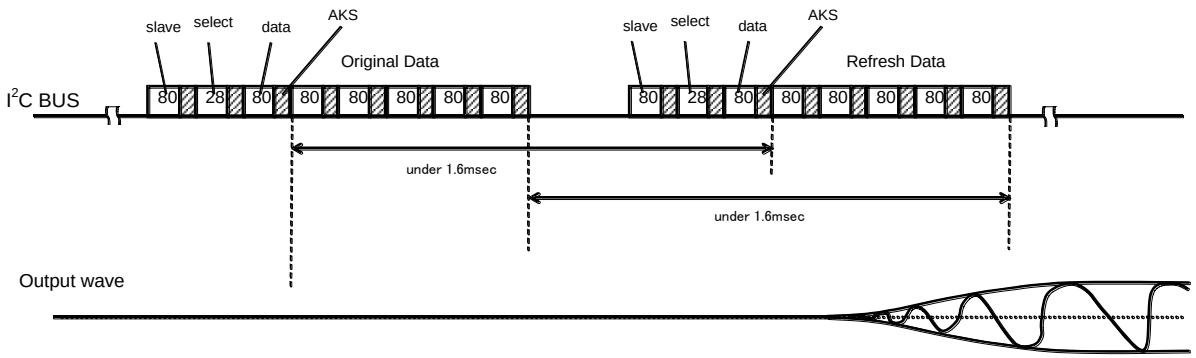

If Refresh data can't be sent like ①timing, the output wave may be mute momentarily.

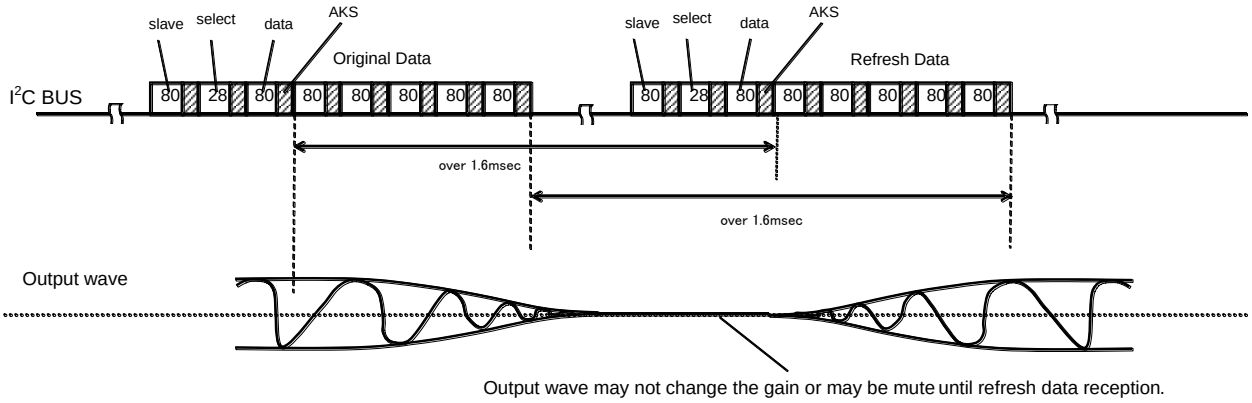

② If Volume change data can send over 94.08msec interval transferring data, there is no need to send Refresh data.

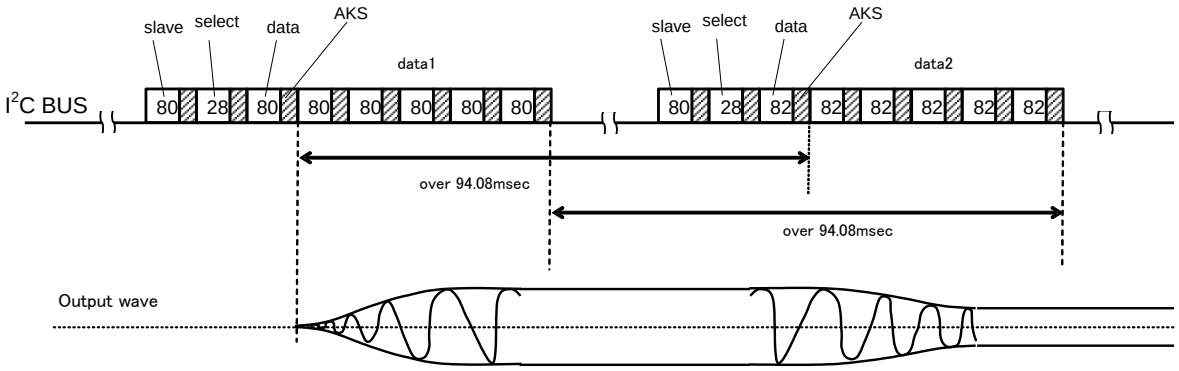

© 2015 ROHM Co., Ltd. All rights reserved.

Ordering Information

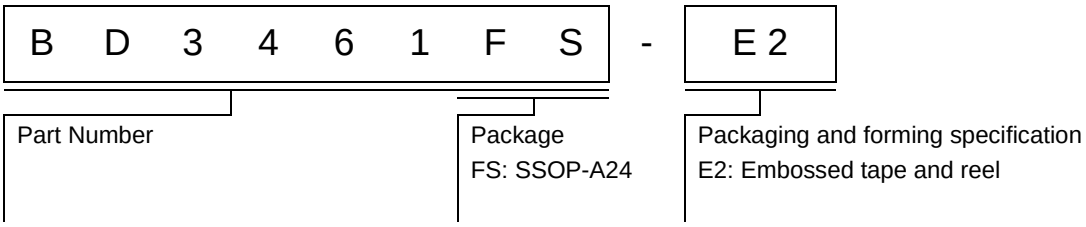

Marking Diagram

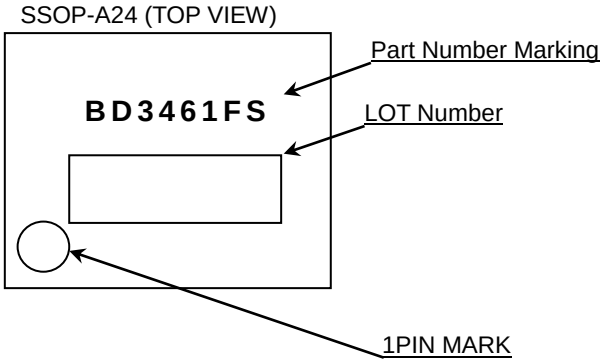

© 2015 ROHM Co., Ltd. All rights reserved.

Physical Dimension, Tape and Reel Information

Package Name	SSOP-A24

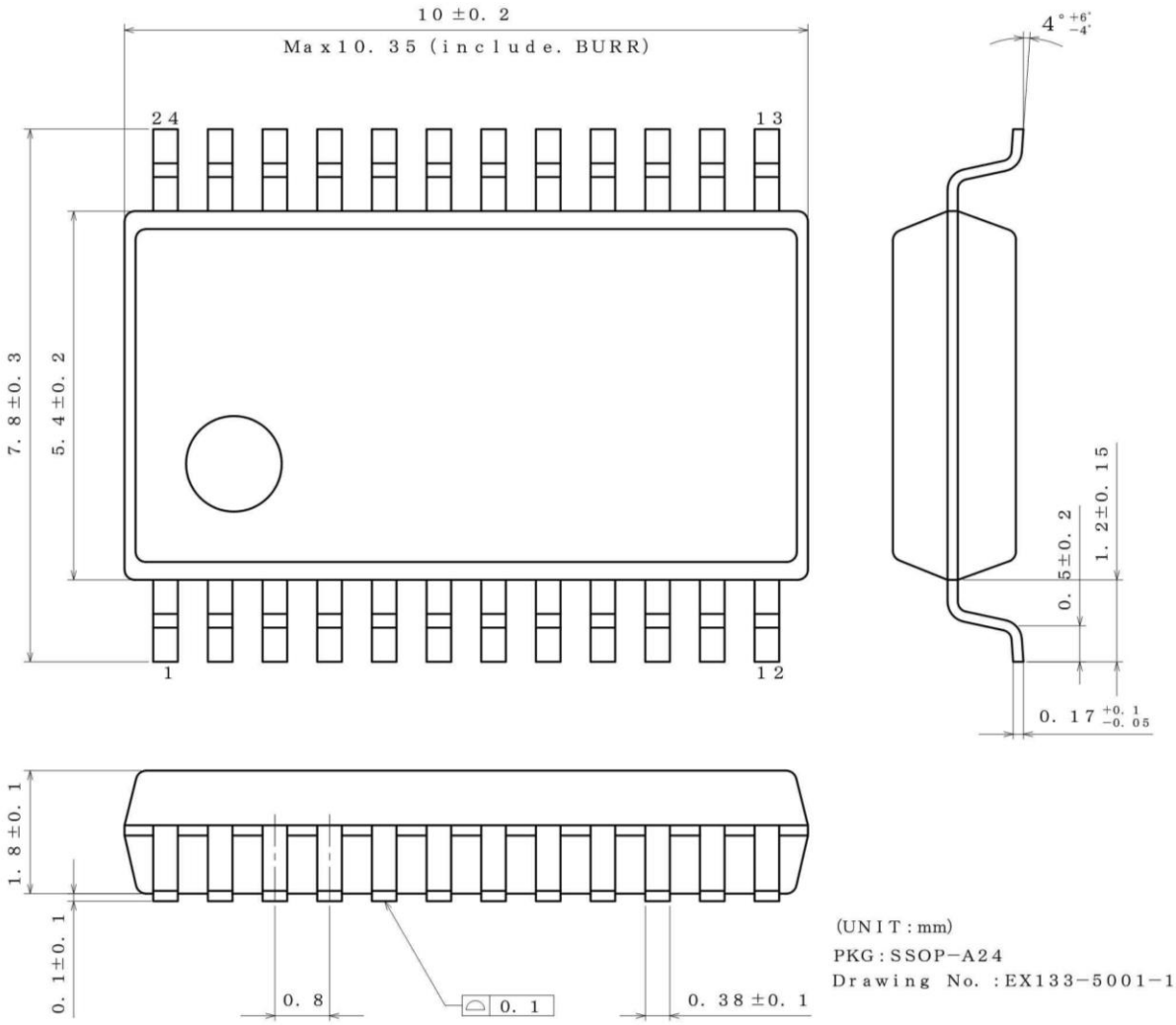

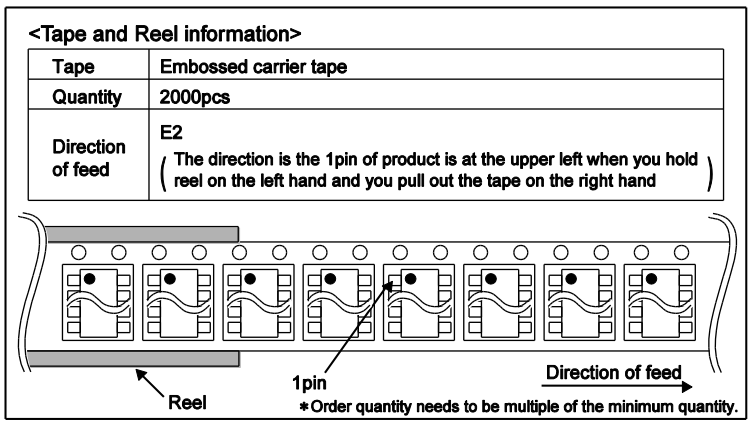

© 2015 ROHM Co., Ltd. All rights reserved.

Revision History

Date	Revision	Changes
16.Dec.2015	001	New Release

© 2015 ROHM Co., Ltd. All rights reserved.

Notice

Precaution on using ROHM Products

1. Our Products are designed and manufactured for application in ordinary electronic equipments (such as AV equipment, OA equipment, telecommunication equipment, home electronic appliances, amusement equipment, etc.). If you intend to use our Products in devices requiring extremely high reliability (such as medical equipment (Note 1), transport equipment, traffic equipment, aircraft/spacecraft, nuclear power controllers, fuel controllers, car equipment including car accessories, safety devices, etc.) and whose malfunction or failure may cause loss of human life, bodily injury or serious damage to property ("Specific Applications"), please consult with the ROHM sales representative in advance. Unless otherwise agreed in writing by ROHM in advance, ROHM shall not be in any way responsible or liable for any damages, expenses or losses incurred by you or third parties arising from the use of any ROHM's Products for Specific Applications.

(Note1) Medical Equipment Classification of the Specific Applications

JAPAN	USA	EU	CHINA
CLASSⅢ	CLASSⅢ	CLASSⅡb	CLASSⅢ
CLASSⅣ		CLASSⅢ	

2. ROHM designs and manufactures its Products subject to strict quality control system. However, semiconductor products can fail or malfunction at a certain rate. Please be sure to implement, at your own responsibilities, adequate safety measures including but not limited to fail-safe design against the physical injury, damage to any property, which a failure or malfunction of our Products may cause. The following are examples of safety measures:
   [a] Installation of protection circuits or other protective devices to improve system safety
   [b] Installation of redundant circuits to reduce the impact of single or multiple circuit failure

3. Our Products are designed and manufactured for use under standard conditions and not under any special or extraordinary environments or conditions, as exemplified below. Accordingly, ROHM shall not be in any way responsible or liable for any damages, expenses or losses arising from the use of any ROHM's Products under any special or extraordinary environments or conditions. If you intend to use our Products under any special or extraordinary environments or conditions (as exemplified below), your independent verification and confirmation of product performance, reliability, etc, prior to use, must be necessary:
   [a] Use of our Products in any types of liquid, including water, oils, chemicals, and organic solvents
   [b] Use of our Products outdoors or in places where the Products are exposed to direct sunlight or dust
   [c] Use of our Products in places where the Products are exposed to sea wind or corrosive gases, including Cl_2, H_2S, NH_3, SO_2, and NO_2
   [d] Use of our Products in places where the Products are exposed to static electricity or electromagnetic waves
   [e] Use of our Products in proximity to heat-producing components, plastic cords, or other flammable items
   [f] Sealing or coating our Products with resin or other coating materials
   [g] Use of our Products without cleaning residue of flux (even if you use no-clean type fluxes, cleaning residue of flux is recommended); or Washing our Products by using water or water-soluble cleaning agents for cleaning residue after soldering
   [h] Use of the Products in places subject to dew condensation

4. The Products are not subject to radiation-proof design.

5. Please verify and confirm characteristics of the final or mounted products in using the Products.

6. In particular, if a transient load (a large amount of load applied in a short period of time, such as pulse. is applied, confirmation of performance characteristics after on-board mounting is strongly recommended. Avoid applying power exceeding normal rated power; exceeding the power rating under steady-state loading condition may negatively affect product performance and reliability.

7. De-rate Power Dissipation depending on ambient temperature. When used in sealed area, confirm that it is the use in the range that does not exceed the maximum junction temperature.

8. Confirm that operation temperature is within the specified range described in the product specification.

9. ROHM shall not be in any way responsible or liable for failure induced under deviant condition from what is defined in this document.

Precaution for Mounting / Circuit board design

1. When a highly active halogenous (chlorine, bromine, etc.) flux is used, the residue of flux may negatively affect product performance and reliability.

2. In principle, the reflow soldering method must be used on a surface-mount products, the flow soldering method must be used on a through hole mount products. If the flow soldering method is preferred on a surface-mount products, please consult with the ROHM representative in advance.

For details, please refer to ROHM Mounting specification

© 2015 ROHM Co., Ltd. All rights reserved.

Precautions Regarding Application Examples and External Circuits

1. If change is made to the constant of an external circuit, please allow a sufficient margin considering variations of the characteristics of the Products and external components, including transient characteristics, as well as static characteristics.

2. You agree that application notes, reference designs, and associated data and information contained in this document are presented only as guidance for Products use. Therefore, in case you use such information, you are solely responsible for it and you must exercise your own independent verification and judgment in the use of such information contained in this document. ROHM shall not be in any way responsible or liable for any damages, expenses or losses incurred by you or third parties arising from the use of such information.

Precaution for Electrostatic

This Product is electrostatic sensitive product, which may be damaged due to electrostatic discharge. Please take proper caution in your manufacturing process and storage so that voltage exceeding the Products maximum rating will not be applied to Products. Please take special care under dry condition (e.g. Grounding of human body / equipment / solder iron, isolation from charged objects, setting of Ionizer, friction prevention and temperature / humidity control).

Precaution for Storage / Transportation

1. Product performance and soldered connections may deteriorate if the Products are stored in the places where:
   [a] the Products are exposed to sea winds or corrosive gases, including Cl2, H2S, NH3, SO2, and NO2
   [b] the temperature or humidity exceeds those recommended by ROHM
   [c] the Products are exposed to direct sunshine or condensation
   [d] the Products are exposed to high Electrostatic

2. Even under ROHM recommended storage condition, solderability of products out of recommended storage time period may be degraded. It is strongly recommended to confirm solderability before using Products of which storage time is exceeding the recommended storage time period.

3. Store / transport cartons in the correct direction, which is indicated on a carton with a symbol. Otherwise bent leads may occur due to excessive stress applied when dropping of a carton.

4. Use Products within the specified time after opening a humidity barrier bag. Baking is required before using Products of which storage time is exceeding the recommended storage time period.

Precaution for Product Label

QR code printed on ROHM Products label is for ROHM's internal use only.

Precaution for Disposition

When disposing Products please dispose them properly using an authorized industry waste company.

Precaution for Foreign Exchange and Foreign Trade act

Since concerned goods might be fallen under listed items of export control prescribed by Foreign exchange and Foreign trade act, please consult with ROHM in case of export.

Precaution Regarding Intellectual Property Rights

1. All information and data including but not limited to application example contained in this document is for reference only. ROHM does not warrant that foregoing information or data will not infringe any intellectual property rights or any other rights of any third party regarding such information or data.

2. ROHM shall not have any obligations where the claims, actions or demands arising from the combination of the Products with other articles such as components, circuits, systems or external equipment (including software).

3. No license, expressly or implied, is granted hereby under any intellectual property rights or other rights of ROHM or any third parties with respect to the Products or the information contained in this document. Provided, however, that ROHM will not assert its intellectual property rights or other rights against you or your customers to the extent necessary to manufacture or sell products containing the Products, subject to the terms and conditions herein.

Other Precaution

1. This document may not be reprinted or reproduced, in whole or in part, without prior written consent of ROHM.

2. The Products may not be disassembled, converted, modified, reproduced or otherwise changed without prior written consent of ROHM.

3. In no event shall you use in any way whatsoever the Products and the related technical information contained in the Products or this document for any military purposes, including but not limited to, the development of mass-destruction weapons.

4. The proper names of companies or products described in this document are trademarks or registered trademarks of ROHM, its affiliated companies or third parties.

© 2015 ROHM Co., Ltd. All rights reserved.

General Precaution

1. Before you use our Products, you are requested to carefully read this document and fully understand its contents. ROHM shall not be in any way responsible or liable for failure, malfunction or accident arising from the use of any ROHM's Products against warning, caution or note contained in this document.

2. All information contained in this document is current as of the issuing date and subject to change without any prior notice. Before purchasing or using ROHM's Products, please confirm the latest information with a ROHM sales representative.

3. The information contained in this document is provided on an "as is" basis and ROHM does not warrant that all information contained in this document is accurate and/or error-free. ROHM shall not be in any way responsible or liable for any damages, expenses or losses incurred by you or third parties resulting from inaccuracy or errors of or concerning such information.

© 2015 ROHM Co., Ltd. All rights reserved.

Mouser Electronics

Authorized Distributor

Click to View Pricing, Inventory, Delivery & Lifecycle Information:

ROHM Semiconductor:

BD3461FS-E2