Analog Audio Processors

Sound Processors with Built-in Surround Sound Function

BD3490FV

●General Description

Built in stereo 4 input selectors and volume that there is not an impedance change of a volume terminal. And this is sound processor can realize 2-band equalizer (bass/treble, gain±14dB / 2dB_step) and bass-boost, output-gain, surround by external components.

●Features

- Built in stereo 4 input selectors (single end).
- Built-in input gain controller for volume of a portable audio input.
- When the volume setting exchanging, it can use a volume input terminal as a microphone input terminal because there is not an impedance change of a volume input terminal.
- Bi-CMOS process is suitable for the design of low current and low energy. And it provides more quality for Bi-CMOS small scale regulator and heat in a set.
- The package of this IC is SSOP-B28. It gathers a sound input terminals, sound output terminals respectively and it arranges them, to be arranging facilitates the laying-out of PCB pattern and reduces PCB area to one-way in the flow of the signal.

●Applications

- It is the optimal for the mini compo or micro compo. Besides, it is possible to use for the audio equipment of TV, DVD etc with all kinds

●Key Specifications

■ Current upon no signal:	7mA(Typ.)
■ Total harmonic distortion:	0.002%(Typ.)
■ Maximum input voltage:	2.4Vrms(Typ.)
■ Cross-talk between selectors:	100dB(Typ.)
■ Volume Control range:	0dB to -87dB
■ Output noise voltage:	5μVrms(Typ.)
■ Residual output noise voltage:	5μVrms(Typ.)
■ Operating Range of Temperature:	-40℃ to +85℃

●package(s) W(Typ.) x D(Typ.) x H(Max.)

SSOP-B28 10.00mm x 7.60mm x 1.35mm

SSOP-B28

●Typical Application Circuit

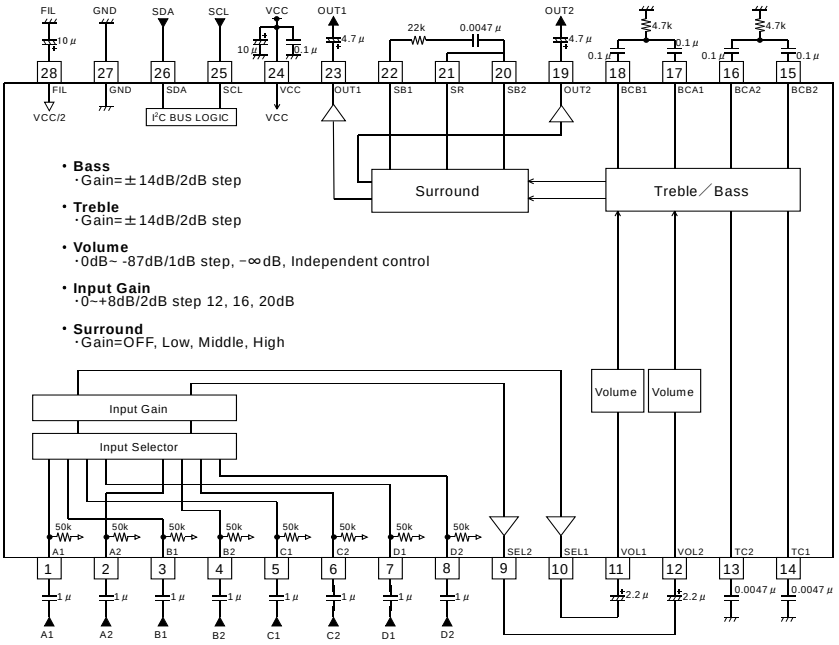

Figure 1. Application Circuit Diagram

© 2012 ROHM Co., Ltd. All rights reserved.

●Pin Configuration

SSOP-B28
(TOP VIEW)

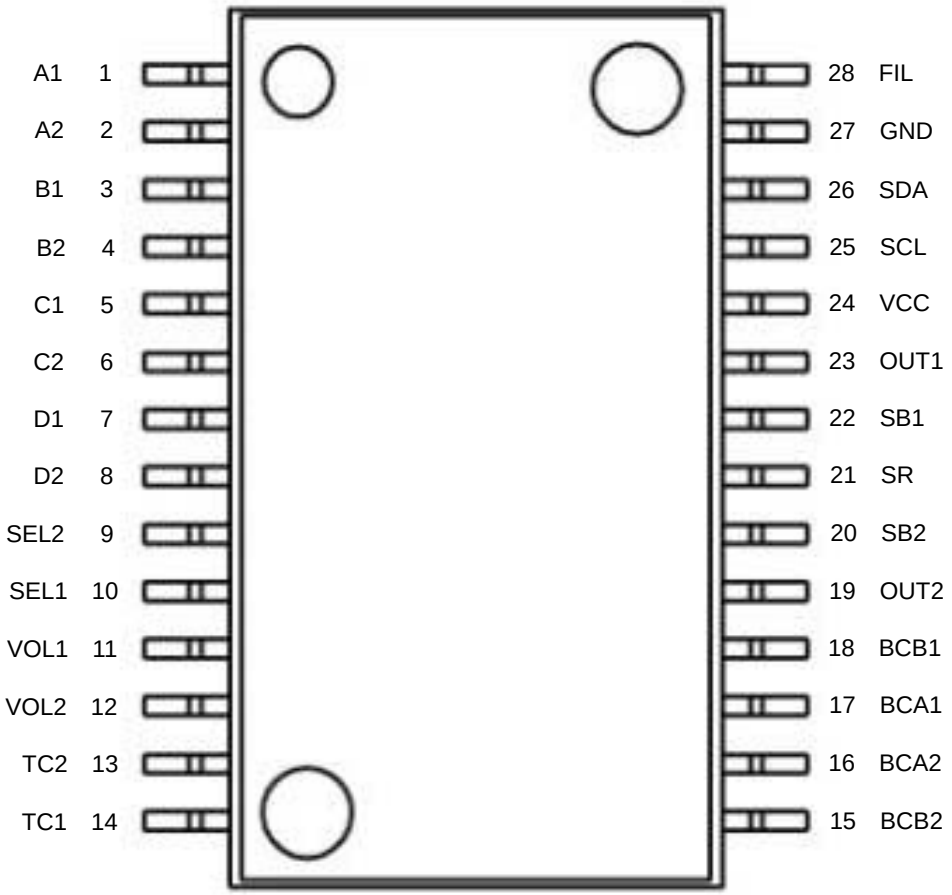

Figure 2. Pin configuration

●Pin Descriptions

Terminal No.	Terminal Name	Description	Terminal No.	Terminal Name	Description
1	A1	A input terminal of 1ch	15	BCB2	Bass filter terminal of 2ch
2	A2	A input terminal of 2ch	16	BCA2	Bass filter terminal of 2ch
3	B1	B input terminal of 1ch	17	BCA1	Bass filter terminal of 1ch
4	B2	B input terminal of 2ch	18	BCB1	Bass filter terminal of 1ch
5	C1	C input terminal of 1ch	19	OUT2	Output terminal of 2ch
6	C2	C input terminal of 2ch	20	SB2	Bass boost terminal of 2ch
7	D1	D input terminal of 1ch	21	SR	Surround terminal
8	D2	D input terminal of 2ch	22	SB1	Bass boost terminal of 1ch
9	SEL2	SEL output terminal of 2ch	23	OUT1	Output terminal of 1ch
10	SEL1	SEL output terminal of 1ch	24	VCC	Power supply terminal
11	VOL1	Volume input terminal of 1ch	25	SCL	I^2C Communication clock terminal
12	VOL2	Volume input terminal of 2ch	26	SDA	I^2C Communication data terminal
13	TC2	Treble filter terminal of 2ch	27	GND	GND terminal
14	TC1	Treble filter terminal of 1ch	28	FIL	VCC/2 terminal

© 2012 ROHM Co., Ltd. All rights reserved.

●Block Diagram

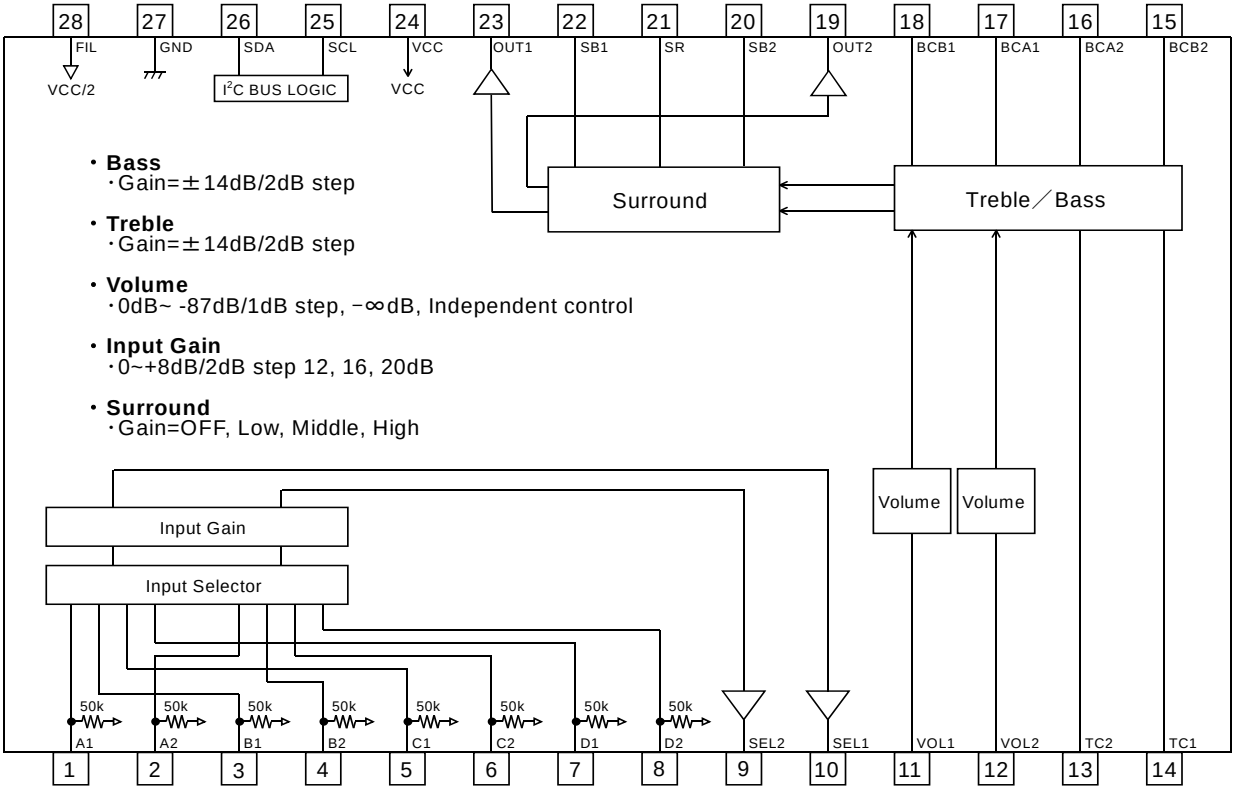

Figure 3. Block Diagram

●Absolute Maximum Ratings

Parameter	Symbol	Limits	Unit
Power supply Voltage	VCC	10.0	V
Input Voltage	Vin	VCC+0.3 to GND-0.3 SCL,SDA only 7 to GND-0.3	V
Power Dissipation	Pd	1063 ※1	mW
Storage Temperature	Tastg	-55 to +150	℃

1 This value decreases 8.5mW/℃ for Ta=25℃ or more.
ROHM standard board shall be mounted. Thermal resistance θja = 117.6(℃/W)。
ROHM standard board Size:70×70×1.6(㎜)
Material: A FR4 grass epoxy board (3% or less of copper foil area)

●Operating Range

Parameter	Symbol	Limits	Unit
Power supply voltage	VCC	4.75 to 9.5	V
Temperature	Topr	-40 to +85	℃

© 2012 ROHM Co., Ltd. All rights reserved.

●Electrical Characteristic

(Unless specified particularly, Ta=25℃, VCC=9.0V, f=1kHz, Vin=1Vrms, Rg=600Ω, RL=10kΩ, A input, Input gain 0dB, Volume 0dB, Bass 0dB, Treble 0dB, Surround off)

BLOCK	Item	Symbol	Limit			Unit	Condition
			Min.	Typ.	Max.		
GENERAL	Current upon no signal	I_Q	–	7	15	mA	No signal
	Voltage gain	G_V	-1.5	0	1.5	dB	Gv=20log(VOUT/VIN)
	Channel balance	CB	-1.5	0	1.5	dB	CB = GV1-GV2
	Total harmonic distortion	THD+N	–	0.002	0.1	%	VOUT=1Vrms BW=400-30KHz
	Output noise voltage *	V_{NO1}	–	5	20	μVrms	Rg = 0Ω BW = IHF-A
	Residual output noise voltage *	V_{NO1}	–	5	20	μVrms	Rg = 0Ω BW = IHF-A
	Cross-talk between channels *	CTC	–	-100	-80	dB	Rg = 0Ω CTC=20log(VOUT/VOUT) BW = IHF-A
INPUT SELECTOR	Input impedance	R_{IN}	35	50	65	kΩ	
	Maximum input voltage	V_{IM}	2.1	2.4	-	Vrms	VIM at THD+N(VOUT)=1% BW=400-30KHz
	Cross-talk between selectors *	CTS	–	-100	-84	dB	Rg = 0Ω CTS=20log(VOUT/VOUT) BW = IHF-A
VOLUME	Control range	$G_{V\ MAX}$	-90	-87	-84	dB	VIN=2Vrms Gv=20log(VOUT/VIN)
	Maximum attenuation *	$G_{V\ MIN}$	–	-100	-80	dB	Volume = -∞ Gv=20log(VOUT/VIN)
BASS	Maximum boost gain	$G_{B\ BST}$	11.5	14	16.5	dB	Gain = 14dB, f = 100Hz VIN=100mVrms Gv=20log(VOUT/VIN)
	Maximum cut gain	$G_{B\ CUT}$	-16.5	-14	-11.5	dB	Gain = -14dB, f = 100Hz VIN=2Vrms Gv=20log(VOUT/VIN)
TREBLE	Maximum boost gain	$G_{T\ BST}$	11.5	14	16.5	dB	Gain = 14dB, f = 100Hz VIN=100mVrms Gv=20log(VOUT/VIN)
	Maximum cut gain	$G_{T\ CUT}$	-16.5	-14	-11.5	dB	Gain = -14dB, f = 100Hz VIN=2Vrms Gv=20log(VOUT/VIN)

VP-9690A(Average value detection, effective value display) filter by Matsushita Communication is used for ＊ measurement.
Phase between input / output is same.

© 2012 ROHM Co., Ltd. All rights reserved.

●Typical Performance Curve(s)

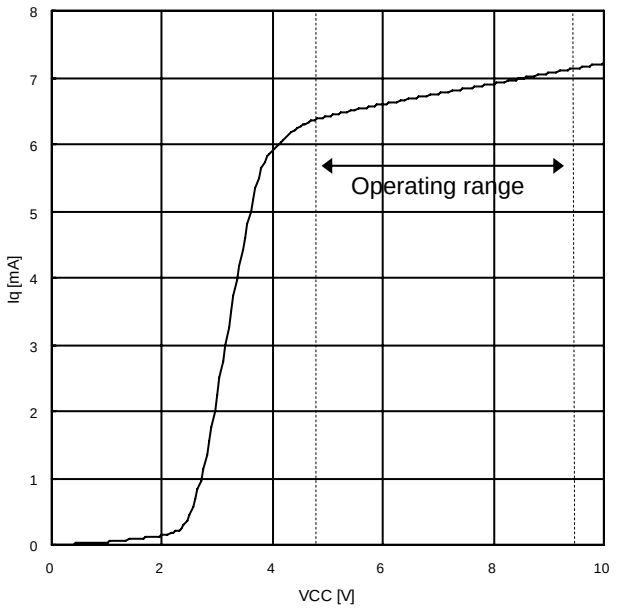

Figure 4. Vcc vs Iq

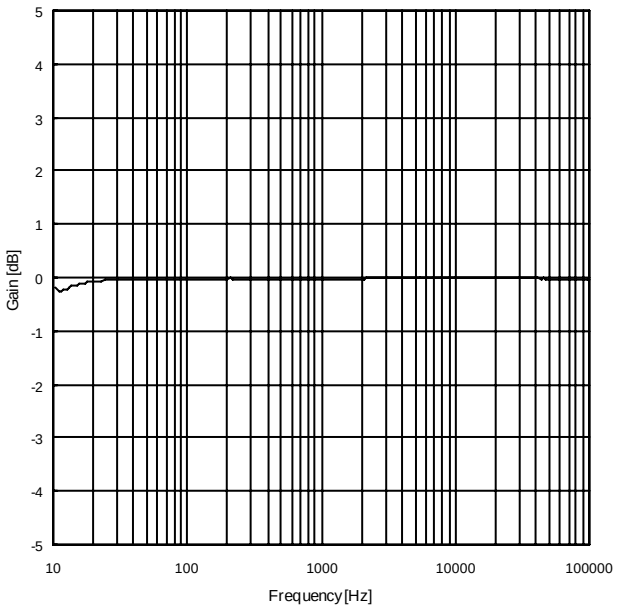

Figure 5. Gain vs Freq.

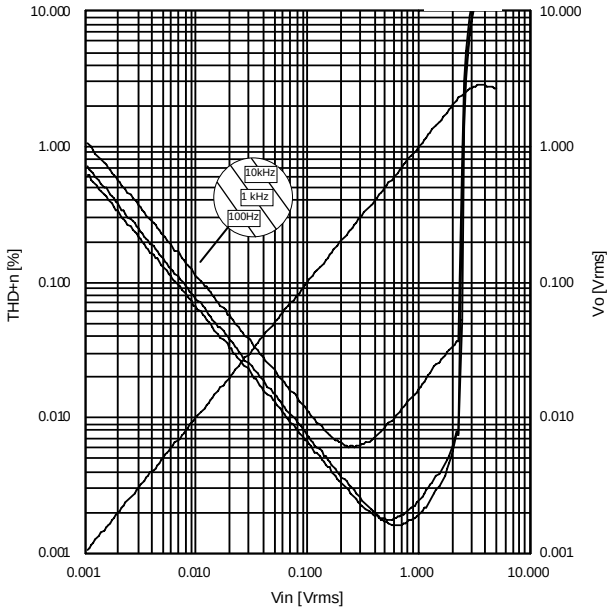

Figure 6. THD+n vs Vo

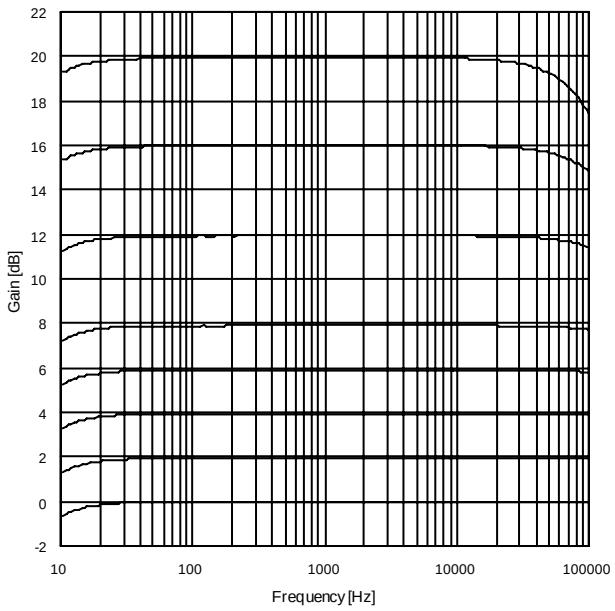

Figure 7. InputGain vs Freq.

© 2012 ROHM Co., Ltd. All rights reserved.

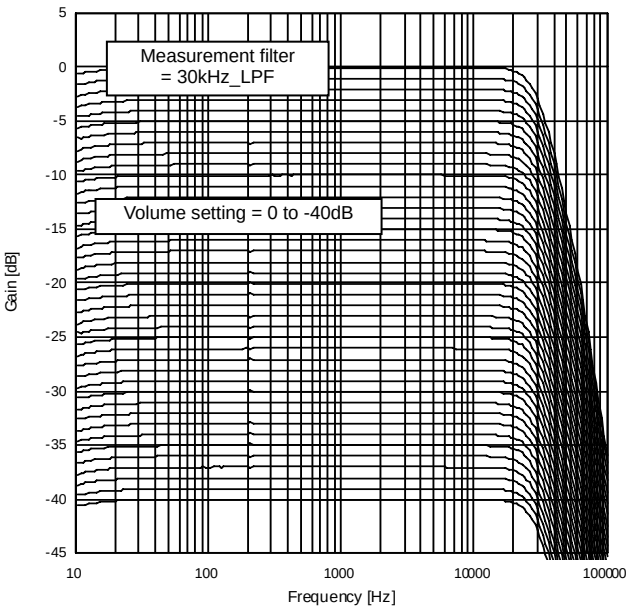

Figure 8. Volume attenuation 1

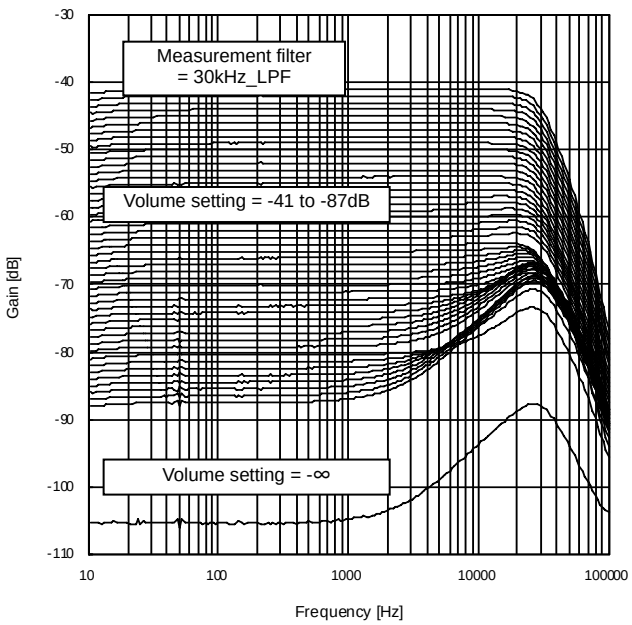

Figure 9. Volume attenuation 2

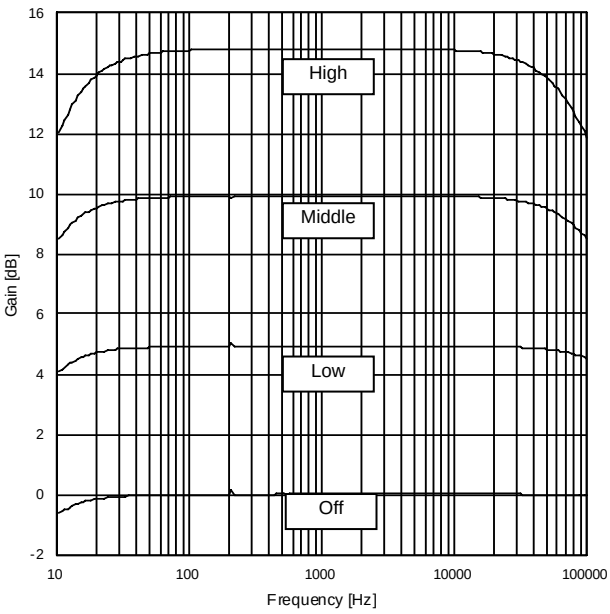

Figure 10. OutputGain vs Freq

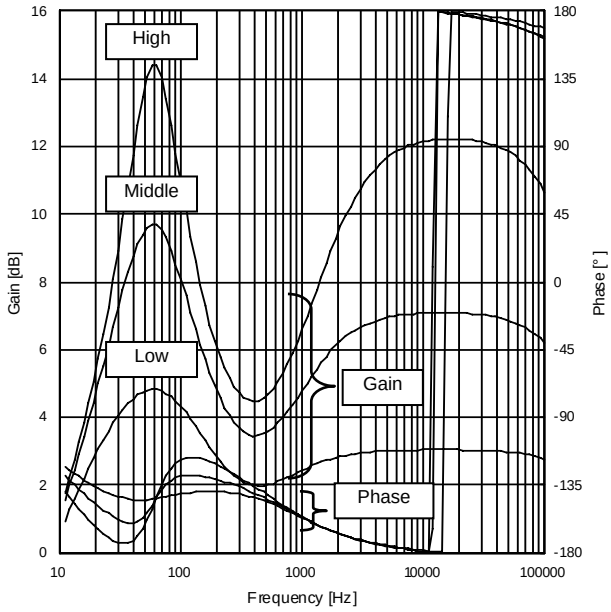

Figure 11. BassBoost+Surround

© 2012 ROHM Co., Ltd. All rights reserved.

●CONTROL SIGNAL SPECIFICATION

(1) Electrical specifications and timing for bus lines and I/O stages

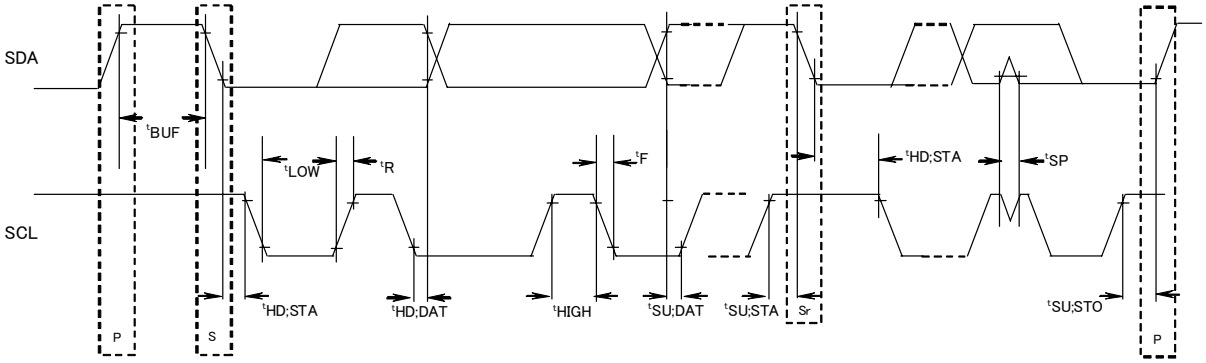

Figure 12. Definition of timing on the I²C-bus

Table 1. Characteristics of the SDA and SCL bus lines for I²C-bus devices

Parameter		Symbol	Fast-mode I²C-bus		Unit
			Min.	Max.	
1	SCL clock frequency	fSCL	0	400	kHz
2	Bus free time between a STOP and START condition	tBUF	1.3	–	μS
3	Hold time (repeated) START condition. After this period, the first clock pulse is generated	tHD;STA	0.6	–	μS
4	LOW period of the SCL clock	tLOW	1.3	–	μS
5	HIGH period of the SCL clock	tHIGH	0.6	–	μS
6	Set-up time for a repeated START condition	tSU;STA	0.6	–	μS
7	Data hold time:	tHD;DAT	300*	–	μS
8	Data set-up time	tSU;DAT	300*	–	ns
9	Set-up time for STOP condition	tSU;STO	0.6	–	μS

All values referred to VIH min. and VIL max. Levels (see Table 2).

Table 2. Characteristics of the SDA and SCL I/O stages for I²C-bus devices

Parameter		Symbol	Fast-mode devices		Unit
			Min.	Max.	
10	LOW level input voltage: fixed input levels	VIL	-0.3	1	V
11	HIGH level input voltage: fixed input levels	VIH	2.3	5	V
12	Pulse width of spikes which must be suppressed by the input filter.	tSP	0	50	ns
13	LOW level output voltage (open drain or open collector): at 3mA sink current.	VOL1	0	0.4	V
14	Input current each I/O pin with an input voltage between 0.4V and 0.9 VDDmax.	Ii	-10	10	μA

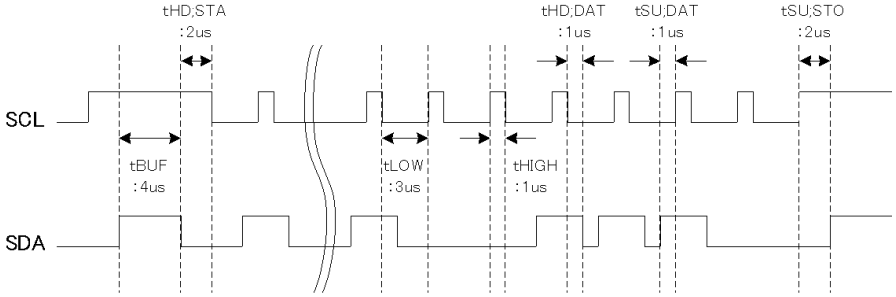

SCL clock frequency:250kHz

Figure 13. A command timing example in the I2C data transmission

© 2012 ROHM Co., Ltd. All rights reserved.

(2) I^{2}C BUS FORMAT

	MSB LSB		MSB LSB		MSB LSB		
S	Slave Address	A	Select Address	A	Data	A	P
1bit	8bit	1bit	8bit	1bit	8bit	1bit	1bit

S = Start conditions (Recognition of start bit)
Slave Address = Recognition of slave address. 7 bits in upper order are voluntary.
The least significant bit is "L" due to writing.
A = ACKNOWLEDGE bit (Recognition of acknowledgement)
Select Address = Select every of volume, bass and treble.
Data = Data on every volume and tone.
P = Stop condition (Recognition of stop bit)

(3) I^{2}C BUS Interface Protocol

1) Basic form

S	Slave Address	A	Select Address	A	Data	A	P
	MSB LSB		MSB LSB		MSB LSB		

2) Automatic increment (Assigned select Address is increased according to the number of data.)

S	Slave Address	A	Select Address	A	Data1	A	Data2	A	・・・・	DataN	A	P
	MSB LSB		MSB LSB		MSB LSB		MSB LSB			MSB LSB		

(Example) No.1. Data1 shall be set as data of address specified by Select Address.
No.2. Data2 shall be set as data of next one of address specified by the No.1.
No.3. DataN shall be set as data of N times incremented one of address specified by the No.1.

3) Configuration unavailable for transmission (In this case, only Select Address1 is set.)

S	Slave Address	A	Select Address1	A	Data	A	Select Address 2	A	Data	A	P
	MSB LSB		MSB LSB		MSB LSB		MSB LSB		MSB LSB		

（Note）If any data is transmitted as Select Address 2 next to data,
it is recognized as data, not as Select Address 2.

(4) Slave address

MSB							LSB
A6	A5	A4	A3	A2	A1	A0	R/W
1	0	0	0	0	0	0	0

© 2012 ROHM Co., Ltd. All rights reserved.

(5) Select Address & Data

Items to be set	Select Address (hex)	MSB	Data						LSB
		D7	D6	D5	D4	D3	D2	D1	D0
Input Selector	04	0	0	0	0	0	Input Selector		
Input gain	06	0	0	0	Input Gain				0
Volume gain 1ch	21	1	Volume Attenuation 1ch						
Volume gain 2ch	22	1	Volume Attenuation 2ch						
Bass gain	51	Bass Boost/Cut	0	0	0	Bass Gain			0
Treble gain	57	Treble Boost/Cut	0	0	0	Treble Gain			0
Gain	78	Surround Mode	0	0	0	Surround gain			
Test Mode	F0	0	0	0	0	0	0	0	0
System Reset	FE	1	0	0	0	0	0	0	1

Notes of data format

Upon continuous data transfer, the Select Address is circulated by the automatic increment function as shown below

→04→06→21→22→51→57→78

© 2012 ROHM Co., Ltd. All rights reserved.

Select address 04 (hex)

Mode	MSB	Input Selector					LSB
	D7	D6	D5	D4	D3	D2	D1	D0
A	0	0	0	0	0	0	0	0
B						0	0	1
C						0	1	0
D						0	1	1
INPUT SHORT						1	0	1
INPUT MUTE						1	1	1
Prohibition						1	0	0
						1	1	0

INPUT MUTE : Mute is done at the input signal in the part of Input Selector.

Select address 06 (hex)

Gain	MSB	Input Gain					LSB
	D7	D6	D5	D4	D3	D2	D1	D0
0dB	0	0	0	0	0	0	0	0
2dB				0	0	0	1	
4dB				0	0	1	0	
6dB				0	0	1	1	
8dB				0	1	0	0	
12dB				0	1	1	0	
16dB				1	0	0	0	
20dB				1	0	1	0	
Prohibition				0	1	0	1	
				0	1	1	1	
				1	0	0	1	
				1	0	1	1	
				1	1	0	0	
				1	1	0	1	
				1	1	1	0	
				1	1	1	1	

: Initial condition

© 2012 ROHM Co., Ltd. All rights reserved.

Select address 21, 22 (hex)

ATT	MSB	Volume Attenuation						LSB
	D7	D6	D5	D4	D3	D2	D1	D0
0dB	1	0	0	0	0	0	0	0
-1dB		0	0	0	0	0	0	1
-2dB		0	0	0	0	0	1	0
-3dB		0	0	0	0	0	1	1
-4dB		0	0	0	0	1	0	0
-5dB		0	0	0	0	1	0	1
-6dB		0	0	0	0	1	1	0
-7dB		0	0	0	0	1	1	1
-8dB		0	0	0	1	0	0	0
-9dB		0	0	0	1	0	0	1
-10dB		0	0	0	1	0	1	0
-11dB		0	0	0	1	0	1	1
-12dB		0	0	0	1	1	0	0
-13dB		0	0	0	1	1	0	1
-14dB		0	0	0	1	1	1	0
-15dB		0	0	0	1	1	1	1
-16dB		0	0	1	0	0	0	0
-17dB		0	0	1	0	0	0	1
-18dB		0	0	1	0	0	1	0
-19dB		0	0	1	0	0	1	1
-20dB		0	0	1	0	1	0	0
-21dB		0	0	1	0	1	0	1
-22dB		0	0	1	0	1	1	0
⋮		⋮	⋮	⋮	⋮	⋮	⋮	⋮
-83dB		1	0	1	0	0	1	1
-84dB		1	0	1	0	1	0	0
-85dB		1	0	1	0	1	0	1
-86dB		1	0	1	0	1	1	0
-87dB		1	0	1	0	1	1	1
Prohibition		1	0	1	1	0	0	0
		⋮	⋮	⋮	⋮	⋮	⋮	⋮
		1	1	1	1	1	1	0
-∞dB		1	1	1	1	1	1	1

: Initial condition

© 2012 ROHM Co., Ltd. All rights reserved.

Select address 51(hex)

Gain	MSB	Bass Gain						LSB
	D7	D6	D5	D4	D3	D2	D1	D0
0dB	Bass Boost /Cut	0	0	0	0	0	0	0
2dB					0	0	1	
4dB					0	1	0	
6dB					0	1	1	
8dB					1	0	0	
10dB					1	0	1	
12dB					1	1	0	
14dB					1	1	1	

Mode	MSB	Bass Boost/Cut						LSB
	D7	D6	D5	D4	D3	D2	D1	D0
Boost	0	0	0	0	Bass gain			0
Cut	1							

Select address 57(hex)

Gain	MSB	Treble Gain						LSB
	D7	D6	D5	D4	D3	D2	D1	D0
0dB	Treble Boost /Cut	0	0	0	0	0	0	0
2dB					0	0	1	
4dB					0	1	0	
6dB					0	1	1	
8dB					1	0	0	
10dB					1	0	1	
12dB					1	1	0	
14dB					1	1	1	

Mode	MSB	Treble Boost Cut						LSB
	D7	D6	D5	D4	D3	D2	D1	D0
Boost	0	0	0	0	Treble gain			0
Cut	1							

: Initial condition

© 2012 ROHM Co., Ltd. All rights reserved.

Select address 78(hex)

Gain	MSB	Surround Gain						LSB
	D7	D6	D5	D4	D3	D2	D1	D0
OFF	Surround SW	0	0	0	0	0	0	0
Low					0	1	0	1
Middle					1	0	1	0
High					1	1	1	1
Prohibition					0	0	0	1
					0	0	1	0
					0	0	1	1
					0	1	0	0
					0	1	1	0
					0	1	1	1
					1	0	0	0
					1	0	0	1
					1	0	1	1
					1	1	0	0
					1	1	0	1
					1	1	1	0

Mode	MSB	Surround SW						LSB
	D7	D6	D5	D4	D3	D2	D1	D0
(A)=ON, (B)=OFF	0	0	0	0	Surround Gain			
(A)=OFF, (B)=ON	1							

: Initial condition

(6) About power on reset

At on of supply voltage circuit made initialization inside IC is built-in. Please send data to all address as initial data at supply voltage on. And please supply mute at set side until this initial data is sent.

Item	Symbol	Limit			Unit	Condition
		Min.	Typ.	Max.		
Rise time of VCC	Trise	20	–	–	usec	VCC rise time from 0V to 3V
VCC voltage of release power on reset	Vpor	–	3.0	–	V	

© 2012 ROHM Co., Ltd. All rights reserved.

●Volume attenuation of the details

ATT(dB)	D7	D6	D5	D4	D3	D2	D1	D0	ATT(dB)	D7	D6	D5	D4	D3	D2	D1	D0
0	1	0	0	0	0	0	0	0	-46	1	0	1	0	1	1	1	0
-1	1	0	0	0	0	0	0	1	-47	1	0	1	0	1	1	1	1
-2	1	0	0	0	0	0	1	0	-48	1	0	1	1	0	0	0	0
-3	1	0	0	0	0	0	1	1	-49	1	0	1	1	0	0	0	1
-4	1	0	0	0	0	1	0	0	-50	1	0	1	1	0	0	1	0
-5	1	0	0	0	0	1	0	1	-51	1	0	1	1	0	0	1	1
-6	1	0	0	0	0	1	1	0	-52	1	0	1	1	0	1	0	0
-7	1	0	0	0	0	1	1	1	-53	1	0	1	1	0	1	0	1
-8	1	0	0	0	1	0	0	0	-54	1	0	1	1	0	1	1	0
-9	1	0	0	0	1	0	0	1	-55	1	0	1	1	0	1	1	1
-10	1	0	0	0	1	0	1	0	-56	1	0	1	1	1	0	0	0
-11	1	0	0	0	1	0	1	1	-57	1	0	1	1	1	0	0	1
-12	1	0	0	0	1	1	0	0	-58	1	0	1	1	1	0	1	0
-13	1	0	0	0	1	1	0	1	-59	1	0	1	1	1	0	1	1
-14	1	0	0	0	1	1	1	0	-60	1	0	1	1	1	1	0	0
-15	1	0	0	0	1	1	1	1	-61	1	0	1	1	1	1	0	1
-16	1	0	0	1	0	0	0	0	-62	1	0	1	1	1	1	1	0
-17	1	0	0	1	0	0	0	1	-63	1	0	1	1	1	1	1	1
-18	1	0	0	1	0	0	1	0	-64	1	1	0	0	0	0	0	0
-19	1	0	0	1	0	0	1	1	-65	1	1	0	0	0	0	0	1
-20	1	0	0	1	0	1	0	0	-66	1	1	0	0	0	0	1	0
-21	1	0	0	1	0	1	0	1	-67	1	1	0	0	0	0	1	1
-22	1	0	0	1	0	1	1	0	-68	1	1	0	0	0	1	0	0
-23	1	0	0	1	0	1	1	1	-69	1	1	0	0	0	1	0	1
-24	1	0	0	1	1	0	0	0	-70	1	1	0	0	0	1	1	0
-25	1	0	0	1	1	0	0	1	-71	1	1	0	0	0	1	1	1
-26	1	0	0	1	1	0	1	0	-72	1	1	0	0	1	0	0	0
-27	1	0	0	1	1	0	1	1	-73	1	1	0	0	1	0	0	1
-28	1	0	0	1	1	1	0	0	-74	1	1	0	0	1	0	1	0
-29	1	0	0	1	1	1	0	1	-75	1	1	0	0	1	0	1	1
-30	1	0	0	1	1	1	1	0	-76	1	1	0	0	1	1	0	0
-31	1	0	0	1	1	1	1	1	-77	1	1	0	0	1	1	0	1
-32	1	0	1	0	0	0	0	0	-78	1	1	0	0	1	1	1	0
-33	1	0	1	0	0	0	0	1	-79	1	1	0	0	1	1	1	1
-34	1	0	1	0	0	0	1	0	-80	1	1	0	1	0	0	0	0
-35	1	0	1	0	0	0	1	1	-81	1	1	0	1	0	0	0	1
-36	1	0	1	0	0	1	0	0	-82	1	1	0	1	0	0	1	0
-37	1	0	1	0	0	1	0	1	-83	1	1	0	1	0	0	1	1
-38	1	0	1	0	0	1	1	0	-84	1	1	0	1	0	1	0	0
-39	1	0	1	0	0	1	1	1	-85	1	1	0	1	0	1	0	1
-40	1	0	1	0	1	0	0	0	-86	1	1	0	1	0	1	1	0
-41	1	0	1	0	1	0	0	1	-87	1	1	0	1	0	1	1	1
-42	1	0	1	0	1	0	1	0	Prohibition	1	1	0	1	1	0	0	0
-43	1	0	1	0	1	0	1	1									
-44	1	0	1	0	1	1	0	0		1	1	1	1	1	1	1	0
-45	1	0	1	0	1	1	0	1	-∞	1	1	1	1	1	1	1	1

: Initial condition

© 2012 ROHM Co., Ltd. All rights reserved.

●Application Circuit Diagram

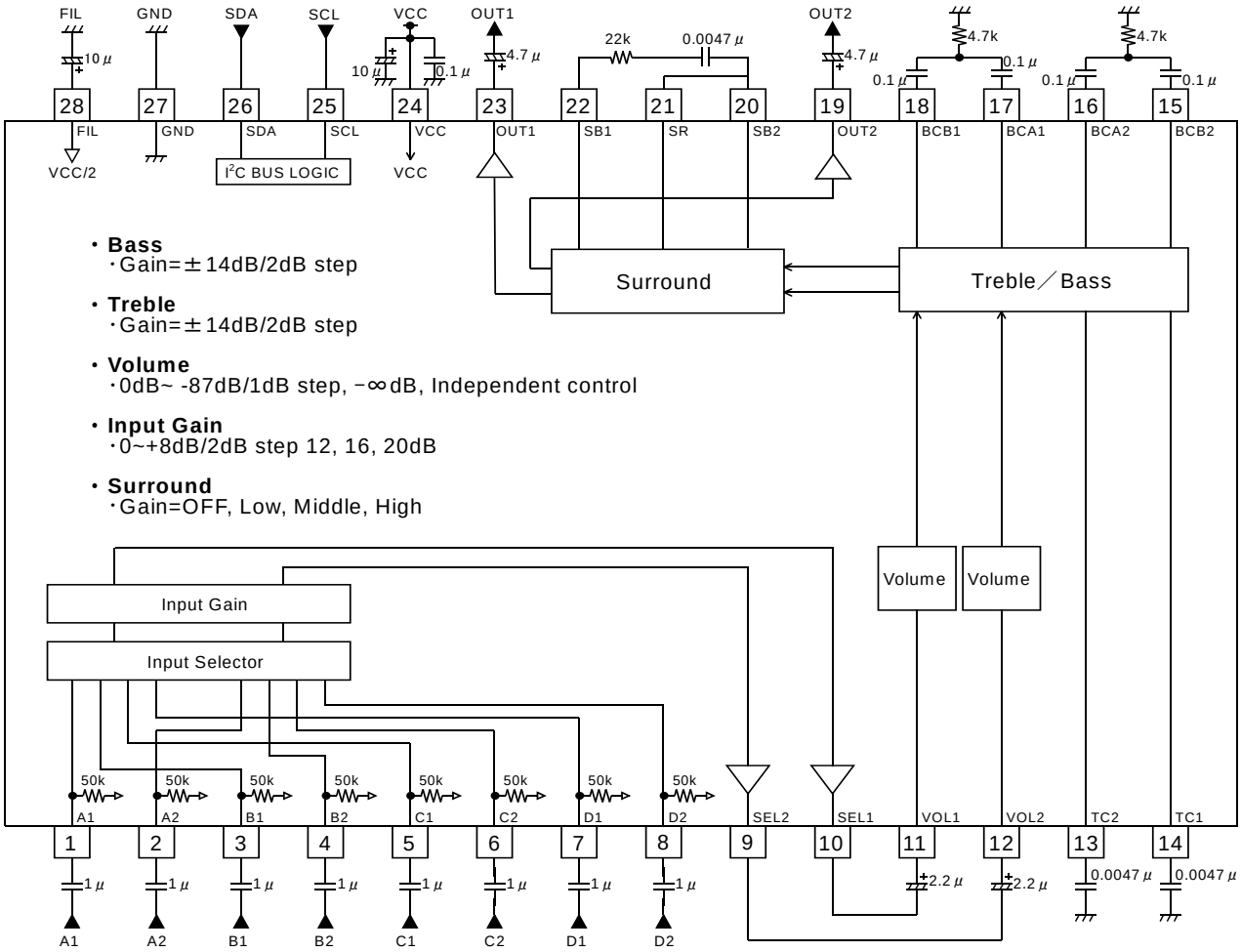

Figure 14. Application Circuit Diagram

(UNIT
RESISTANCE: Ω
CAPACITANCE: F)

Notes on wiring

①Please connect the decoupling capacitor of a power supply in the shortest distance as much as possible to GND.
②Lines of GND shall be one-point connected.
③Wiring pattern of Digital shall be away from that of analog unit and cross-talk shall not be acceptable.
④Lines of SCL and SDA of I^2C BUS shall not be parallel if possible.
The lines shall be shielded, if they are adjacent to each other.
⑤Lines of analog input shall not be parallel if possible. The lines shall be shielded, if they are adjacent to each other.

© 2012 ROHM Co., Ltd. All rights reserved.

●**Thermal Derating Curve**

About the thermal design by the IC
Characteristics of an IC have a great deal to do with the temperature at which it is used, and exceeding absolute maximum ratings may degrade and destroy elements. Careful consideration must be given to the heat of the IC from the two standpoints of immediate damage and long-term reliability of operation.

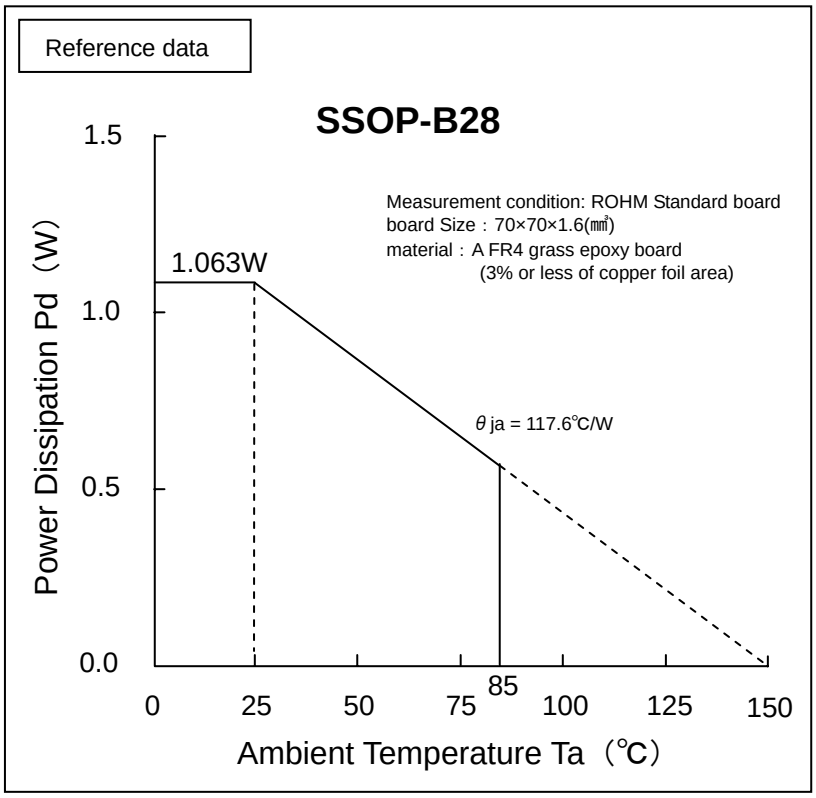

Fig.15 Temperature Derating Curve

Note) Values are actual measurements and are not guaranteed.

Power dissipation values vary according to the board on which the IC is mounted.

© 2012 ROHM Co., Ltd. All rights reserved.

●Terminal Equivalent Circuit and Description

Terminal No.	Terminal name	Terminal voltage	Equivalent Circuit	Terminal Description
1 2 3 4 5 6 7 8	A1 A2 B1 B2 C1 C2 D1 D2	4.5	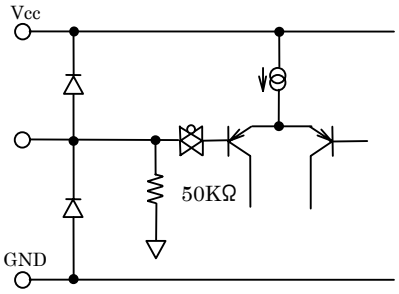	A terminal for stereo signal input. Input impedance = 50kΩ(typ).
9 10 19 23	SEL2 SEL1 OUT2 OUT1	4.5	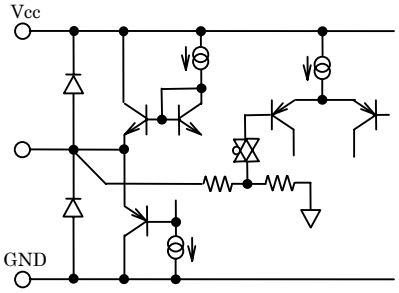	A terminal for output.
11 12	VOL1 VOL2	4.5	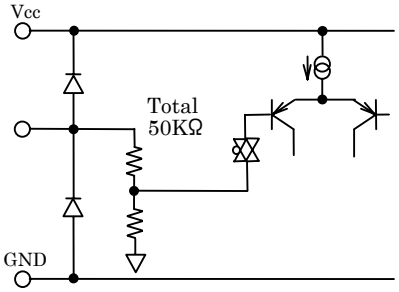	A terminal for volume input. Input impedance = 50kΩ(typ).
13 14 15 18	TC2 TC1 BCB2 BCB1	4.5	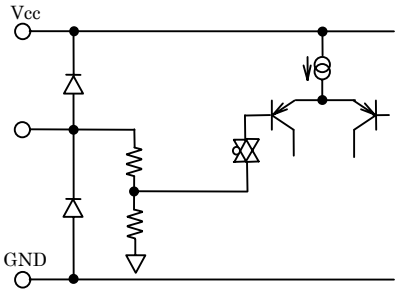	TC1,TC2 : A terminal for treble filter. About resistance, please reference P21, Figure 20 and Table 4. BCB1,BCB2 : A terminal for bass filter. About resistance, please reference P20, Figure 18 and Table 3.
16 17	BCA2 BCA1	4.5	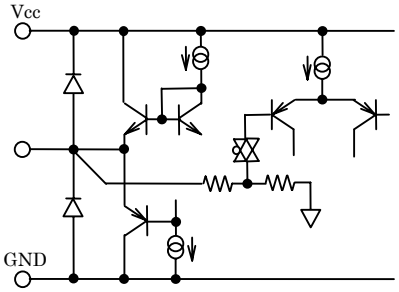	A terminal for bass filter.
24	VCC	8.5		Power supply terminal.

The figure in the pin explanation, terminal voltage and input/output equivalent circuit is reference value, it doesn't guarantee the value.

© 2012 ROHM Co., Ltd. All rights reserved.

Terminal No.	Terminal name	Terminal voltage	Equivalent Circuit	Terminal Description
20 22	SB2 SB1	4.5	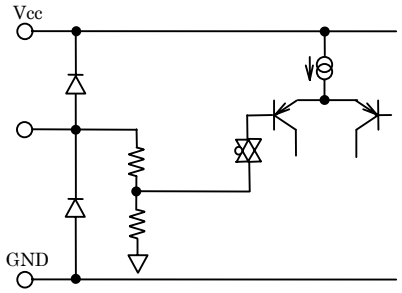	A terminal for Bass boost. About resistance, please reference P22, Figure 22 and Table 5.
21	SR	4.5	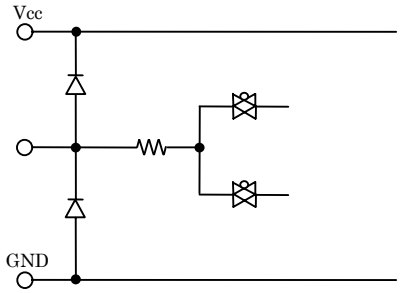	A terminal for surround. About resistance, please reference P22, Figure 22 and Table 5.
25	SCL	–	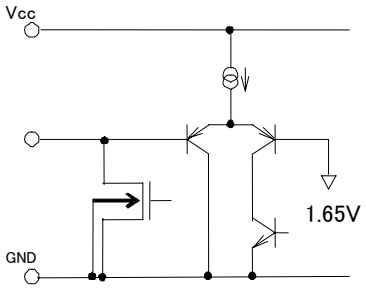	A terminal for clock input of I^2C BUS communication.
26	SDA	–	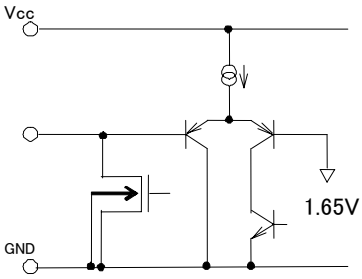	A terminal for data input of I^2C BUS communication.
27	GND	0		Analog ground terminal.
28	FIL	4.5	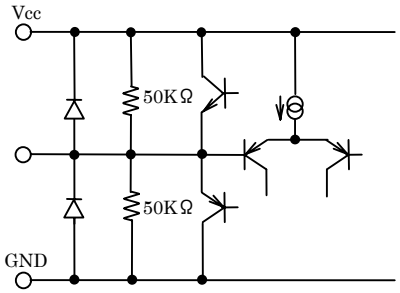	1/2 VCC terminal. Voltage for reference bias of analog signal system. The simple precharge circuit and simple discharge circuit for an external capacitor are built in.

The figure in the pin explanation, terminal voltage and input/output equivalent circuit is reference value, it doesn't guarantee the value.

© 2012 ROHM Co., Ltd. All rights reserved.

●Cautions on use

1. Absolute Maximum Ratings: Impressed Voltage

When it impressed the voltage on VCC more than the absolute maximum rating voltage, circuit currents increase rapidly, and there is absolutely a case to reach characteristic deterioration and destruction of a device. In particular in a serge examination of a set, when it is expected the impressing serge at VCC terminal (24pin), please do not impress the large and over the absolute maximum rating voltage (including a operating voltage + serge ingredient (around 14V)).

2. About input signal

1) About constant set up of input coupling capacitor

In the signal input terminal, the constant setting of input coupling capacitor C(F) be sufficient input impedance R_{IN}(Ω) inside IC and please decide. The first HPF characteristic of RC is composed.

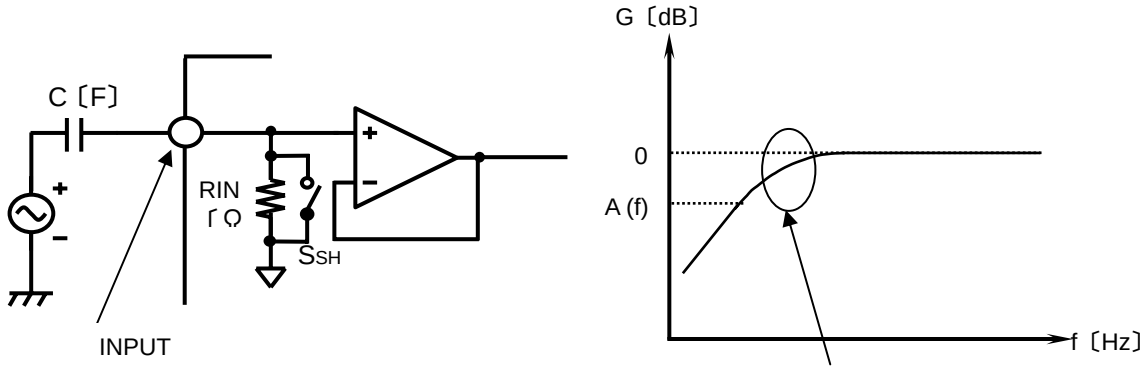

$$A(f) = \sqrt{\frac{(2\pi fCR_{IN})^2}{1+(2\pi fCR_{IN})^2}}$$

Figure 16. Input short circuit

2) About the input selector SHORT

SHORT mode is the command which makes switch S_{SH} =ON an input selector part and input impedance RIN of all terminals, and makes resistance small. Switch S_{SH} is OFF when not choosing a SHORT command.

A constant time becomes small at the time of this command twisting to the resistance inside the capacitor connected outside and LSI. The charge time of a capacitor becomes short.

Since SHORT mode turns ON the switch of S_{SH} and makes it low impedance, please use it at the time of a non-signal.

3.About output load characteristics

The usages of load for output are below (reference). Please use the load more than 10[kΩ](TYP)

Terminal No.	Terminal name	Terminal No.	Terminal name
9	SEL2	19	OUT2
10	SEL1	23	OUT1

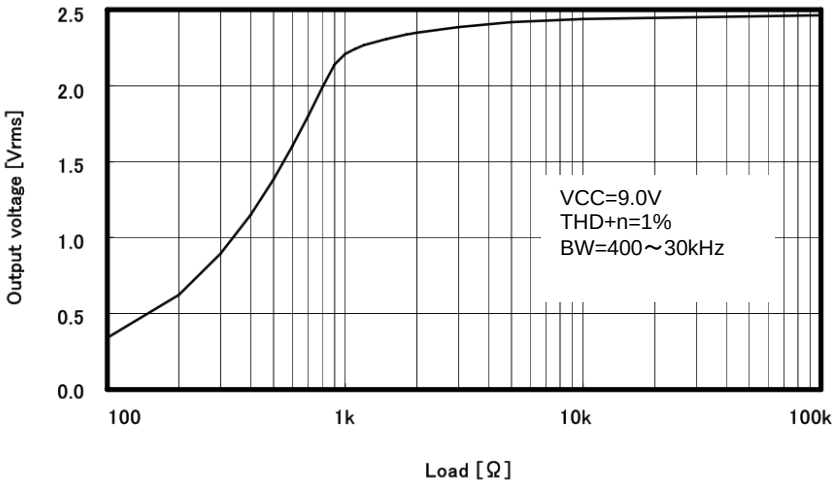

Figure 17. Output load characteristic. Reference Vcc=9.0V

© 2012 ROHM Co., Ltd. All rights reserved.

4.About the voice input terminal

When a terminal is made open, the inside resistance of the terminal is 50kΩ. Therefore, it sometimes causes a trouble by the plunge noise from the outside. When there is a voice input terminal which isn't used, please connect it to GND by using the capacitor, or, set up input selector by the microcomputer so that the input terminal which isn't used may not be chosen.

5. Constant set up of bass filter

Bass Boost

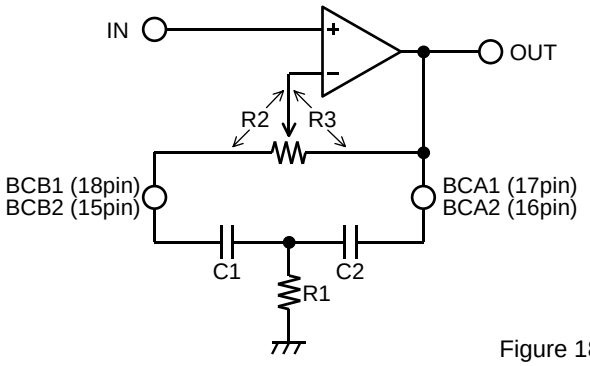

Bass Cut

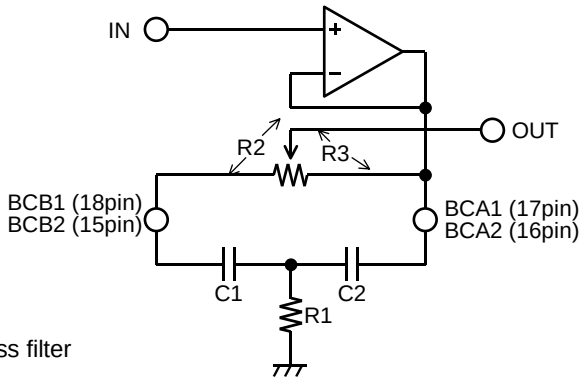

Figure 18. Bass filter

$$fo = \frac{1}{2\pi\sqrt{R1(R2+R3)\cdot C1\cdot C2}}\,[Hz]$$

$$Q = \frac{\sqrt{R1(R2+R3)\cdot C1\cdot C2}}{R1(C1+C2)+R2C1}$$

$$\text{BOOST GAIN} = 20\log\frac{\frac{R2+R3}{R1}+\frac{C2}{C1}+1}{\frac{R2}{R1}+\frac{C2}{C1}+1}\,[dB]$$

$$\text{CUT GAIN} = 20\log\frac{\frac{R2}{R1}+\frac{C2}{C1}+1}{\frac{R2+R3}{R1}+\frac{C2}{C1}+1}\,[dB]$$

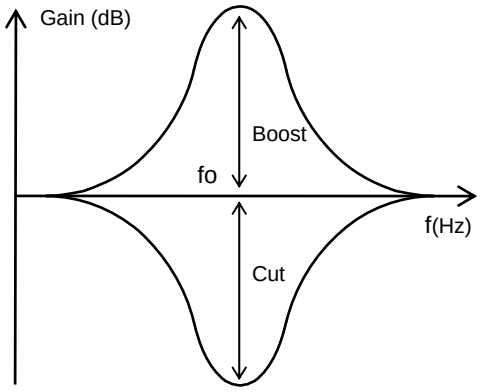

Figure 19. Bass frequency characteristics

Table 3.
Standard value of R3, R4(reference)

Bass Boost/Cut gain	Resistance(kΩ) ※TYP.	
	R2	R3
±0dB	53.5	0
±2dB	40.9	12.6
±4dB	30.5	23.0
±6dB	22.3	31.2
±8dB	15.8	37.7
±10dB	10.6	42.9
±12dB	6.5	47.0
±14dB	3.2	50.3

Actual boost/cut amount may be dispositioned somewhat.

© 2012 ROHM Co., Ltd. All rights reserved.

6. Constant set up of treble filter

Treble Boost

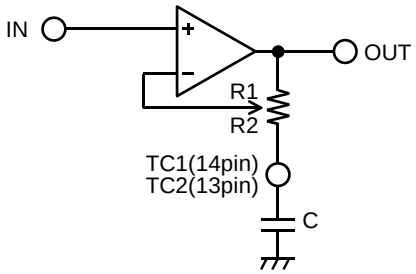

Treble Cut

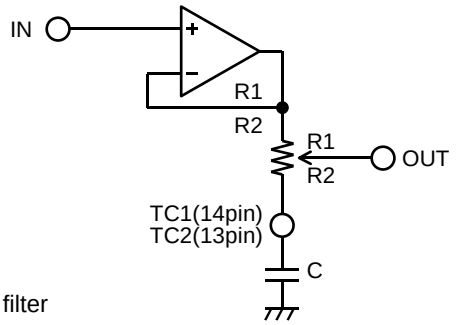

Figure 20. Treble filter

$$fc = \frac{1}{2\pi R2C}[Hz]$$

$$\text{BOOST GAIN} = 20\log\frac{R1+R2+ZC}{R2+ZC}[dB]$$

$$\text{CUT GAIN} = 20\log\frac{R2+ZC}{R1+R2+ZC}[dB]$$

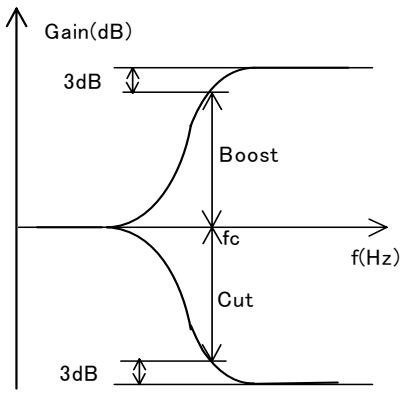

Figure 21. Treble frequency characteristics

Table 4.
Standard value of R1, R2(reference)

Treble Boost/Cut gain	Resistance(kΩ) ※TYP.	
	R1	R2
±0dB	0	29.1
±2dB	6.1	23.0
±4dB	10.9	18.2
±6dB	14.8	14.3
±8dB	17.9	11.2
±10dB	20.5	8.6
±12dB	22.6	6.5
±14dB	24.4	4.7

Actual boost/cut amount may be dispositioned somewhat.

© 2012 ROHM Co., Ltd. All rights reserved.

7.The use example of Bass Boost

7-1.The application circuit example of Bass Boost

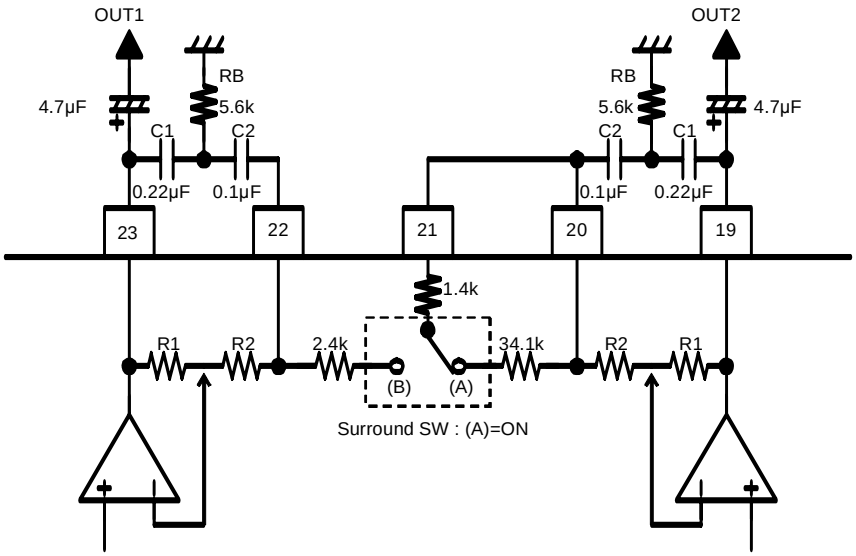

Figure 22. The application circuit example of Bass Boost

Table 5.
Standard value of R1, R2 (reference)

Surround Gain	R1[kΩ]	R2[kΩ]
OFF	0	84.5
Low	44.8	39.7
Middle	70.0	14.5
High	84.2	0.3

7-2. The computation formula and the representative characteristic of Bass Boost Gain
(fo=50Hz, Q=1.8(Surround Gain=High))

$$\text{Gain} = 20\log \frac{\dfrac{R_1+R_2}{R_B}+\dfrac{C_1}{C_2}+1}{\dfrac{R_2}{R_B}+\dfrac{C_1}{C_2}+1}\,[\text{dB}]$$

$$fo = \frac{1}{2\pi\sqrt{R_B(R_1+R_2)\cdot C_1\cdot C_2}}\,[\text{Hz}]$$

$$Q = \frac{\sqrt{R_B(R_1+R_2)\cdot C_1\cdot C_2}}{R_B(C_1+C_2)+R_2\cdot C_2}$$

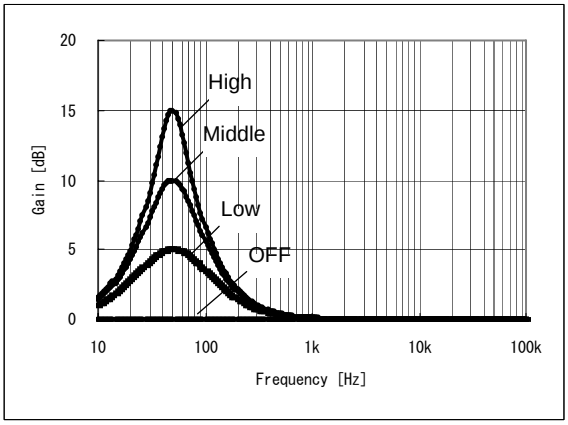

Figure 23. The representative characteristic of Bass Boost

7-3. The representative characteristic in fixed number change

Table 6. The fixed number example (*1)

No.	The specification	C1 [μF]	C2 [μF]	RB [kΩ]
①	fo=60Hz,Q=1.8,Gain=16.8dB	0.15	0.1	5.6
②	fo=72Hz,Q=1.7,Gain=15.0dB	0.15	0.068	5.6
③	fo=79Hz,Q=1.9,Gain=16.2dB	0.15	0.068	4.7
④	fo=89Hz,Q=1.8,Gain=16.9dB	0.1	0.068	5.6

(*1): Surround Gain=High

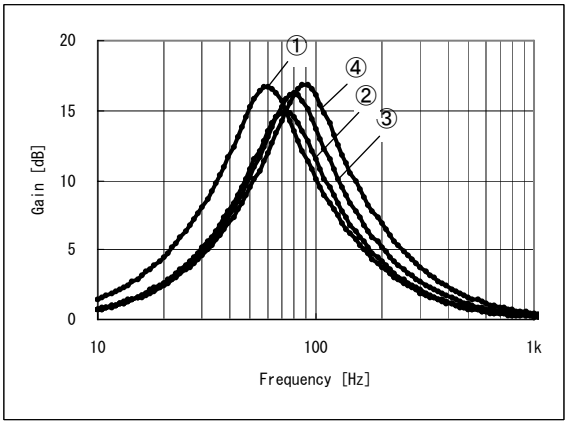

Figure 24. The representative characteristic in fixed number change of Bass Boost

© 2012 ROHM Co., Ltd. All rights reserved.

8.The use example of Bass Boost & Surround

8-1. The application circuit example of Bass Boost & Surround

In this application circuit example, it isn't possible to do the use only of Surround. Also, Surround Gain depends on the setting value of Bass Boost Gain.

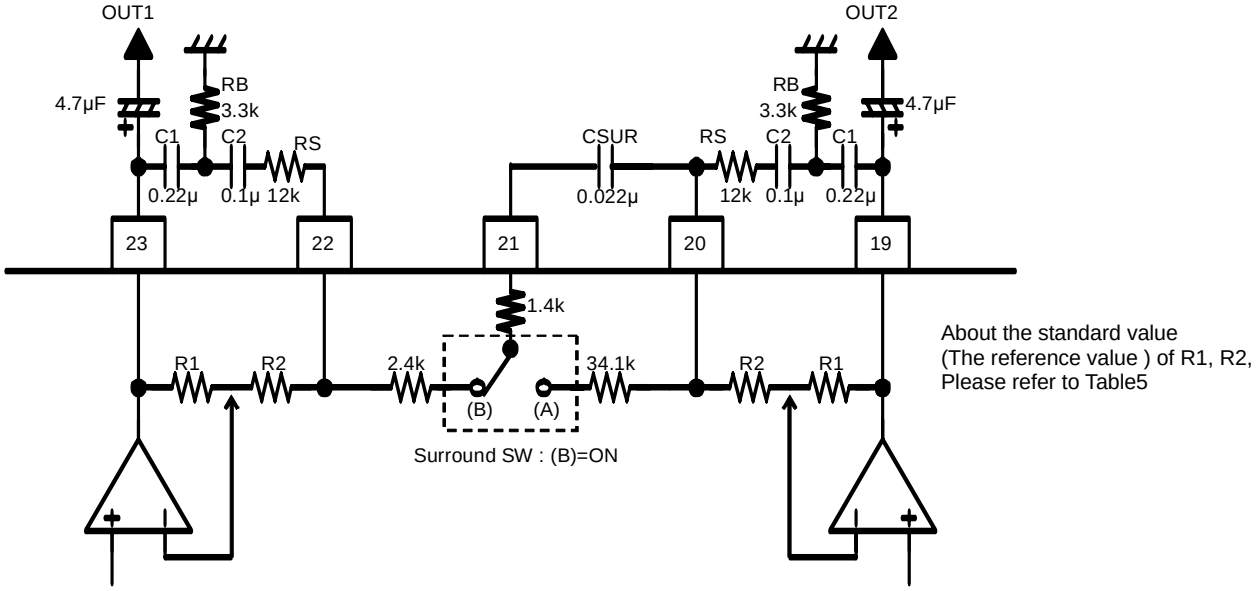

Figure 25. The application circuit example of Bass Boost & Surround

8-2. The computation formula and the representative characteristic Bass Boost Gain (Surround SW : (A)=ON)

$$\text{Gain} = 20\log \frac{\dfrac{R_1+R_2+R_S}{R_B}+\dfrac{C_1}{C_2}+1}{\dfrac{R_2+R_S}{R_B}+\dfrac{C_1}{C_2}+1}\,[\text{dB}]$$

$$f_o = \frac{1}{2\pi\sqrt{R_B(R_1+R_2+R_S)\cdot C_1\cdot C_2}}\,[\text{Hz}]$$

$$Q = \frac{\sqrt{R_B(R_1+R_2+R_S)\cdot C_1\cdot C_2}}{R_B(C_1+C_2)+C_2(R_2+R_S)}$$

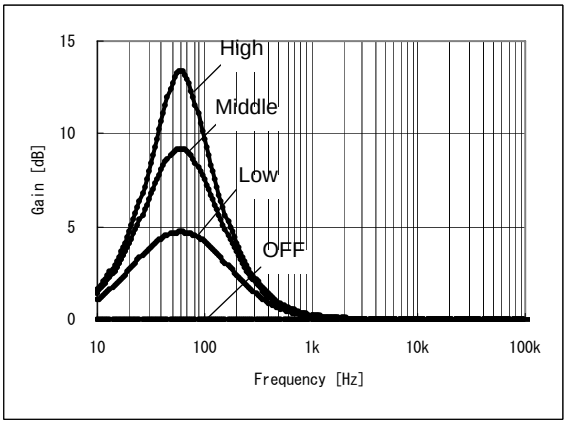

Figure 26. Bass Boost (Surround SW : (A)=ON)の代表特性

8-3. The representative characteristic of Surround Gain (Surround SW : (B)=ON)

In this application circuit example, it isn't possible to do the use only of Surround. Also, Surround Gain depends on the setting value of Bass Boost Gain.

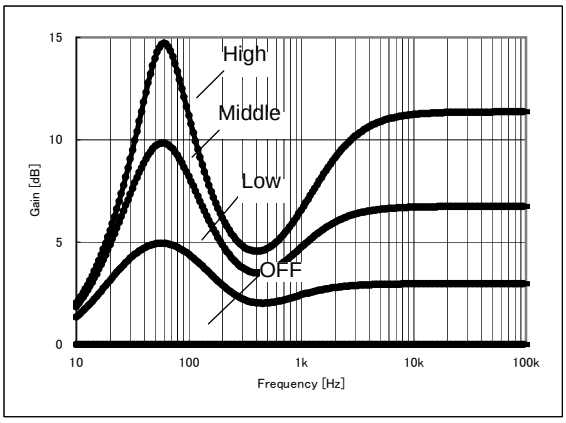

Figure 27. The representative characteristic of Surround Gain (Surround SW : (B)=ON)

© 2012 ROHM Co., Ltd. All rights reserved.

9.The use example easy Surround

9. The application circuit example of easy Surround

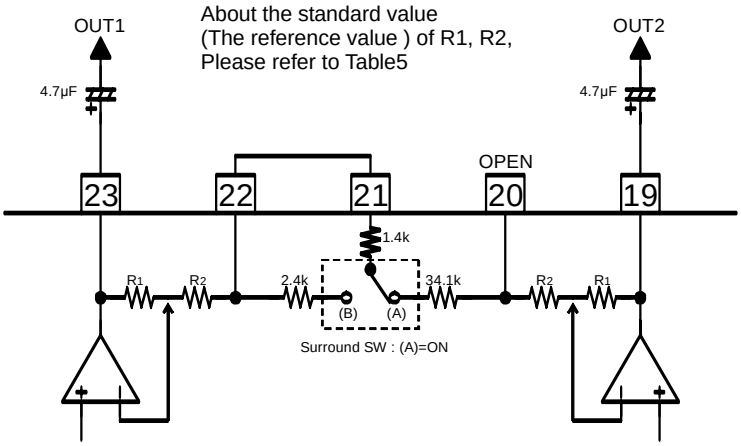

Figure 28. The application circuit example of easy Surround

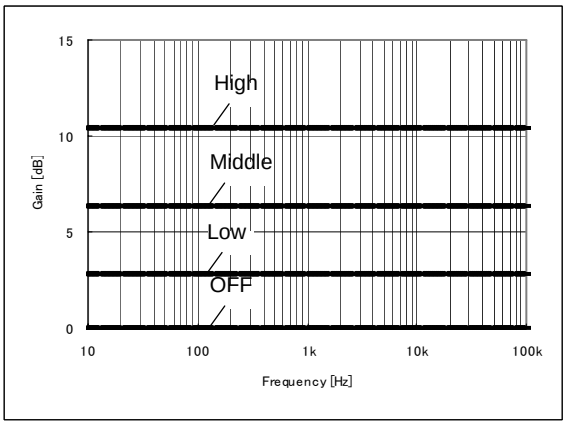

Figure 29. The representative characteristic Of easy Surround

10.The use example Surround

10-1. The application circuit example of Surround

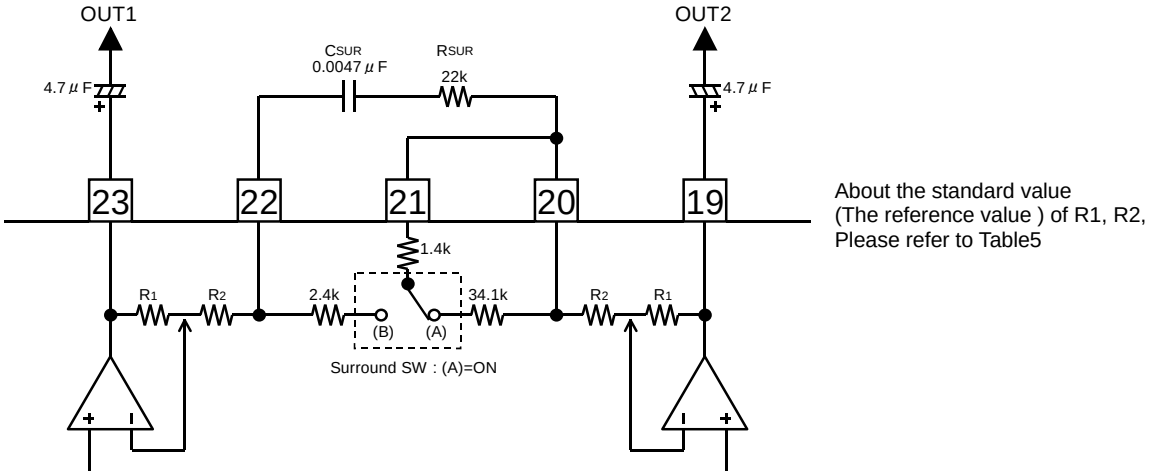

Figure 30. The application circuit example of Surround

10-2. The representative characteristic

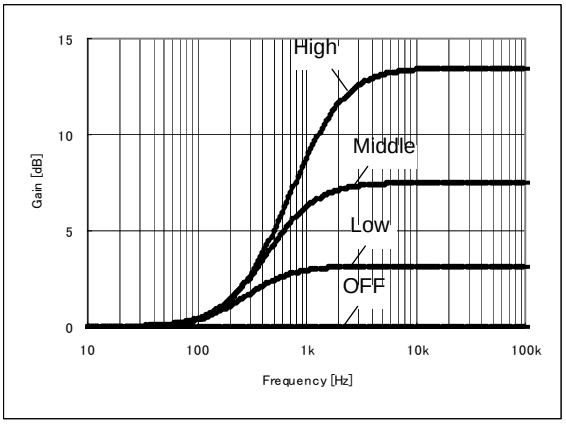

Figure 31. The representative characteristic of Surround

© 2012 ROHM Co., Ltd. All rights reserved.

11.The use example Output Gain

11-1. The application circuit example of Output Gain

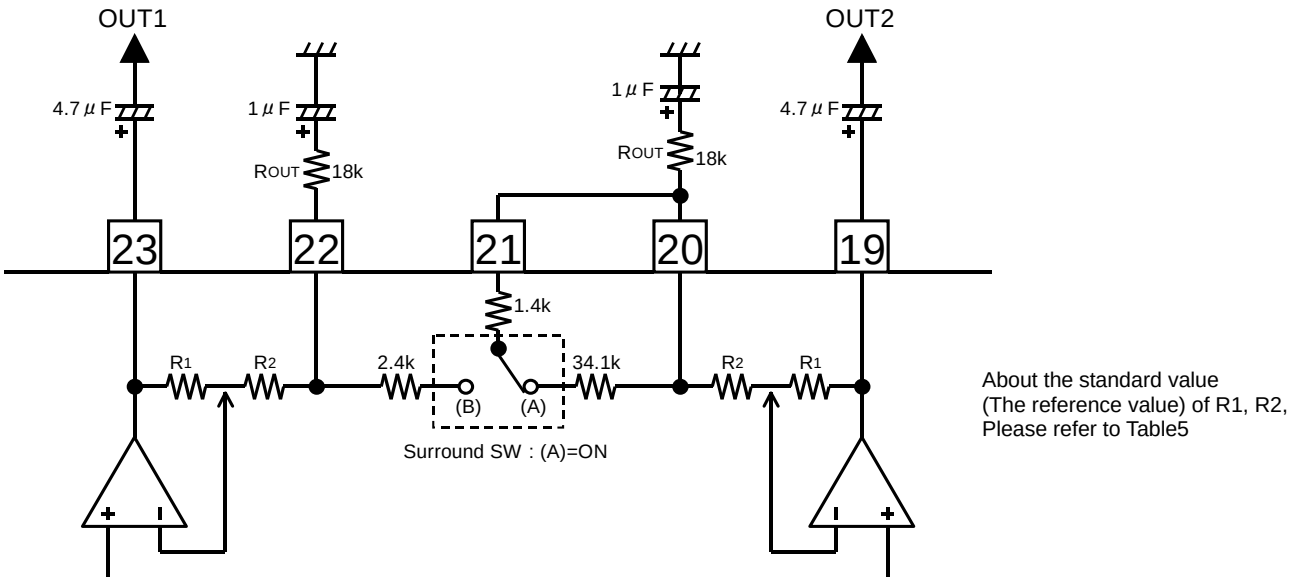

Figure 32. The application circuit example of Output Gain

11-2. The computation formula and the representative characteristic Output Gain

$$\text{Gain} = 20\log\frac{R_1 + R_2 + R_{OUT}}{R_2 + R_{OUT}}\,[\text{dB}]$$

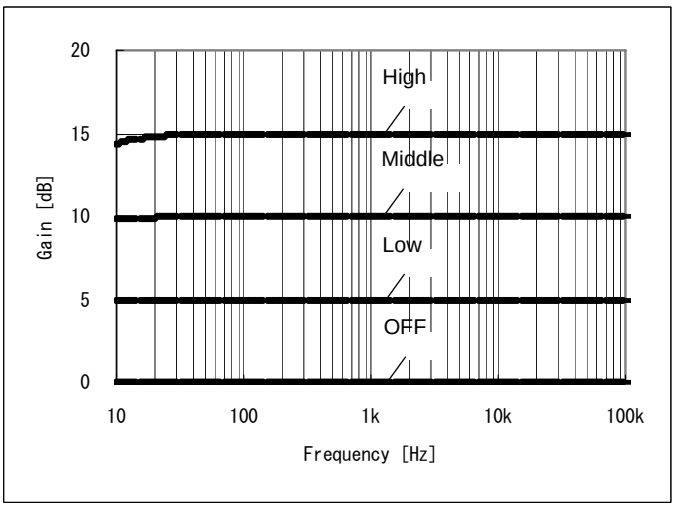

Figure 33. The representative characteristic of Output Gain

© 2012 ROHM Co., Ltd. All rights reserved.

12. The use example easy 3band

12-1. The application circuit example of easy 3band

・Easy 3 band can be composed using Bass Boost, Bass, Treble.
・Use Bass Boost in the Bass band, use Bass in the Middle band and use Treble just as it is as the Treble band.
・The Middle band, the Treble band are Gain=±14dB/2dB step but the Bass band becomes 4 step changing by Gain=OFF/Low/Middle/High.
・At the addition function unused time, it is Surround Gain=OFF, Surround SW : Use in (A)=ON.
・Surround SW : Be careful because it damages output (23pin, 19pin) short-circuiting next, a characteristic when having made (B)=ON.

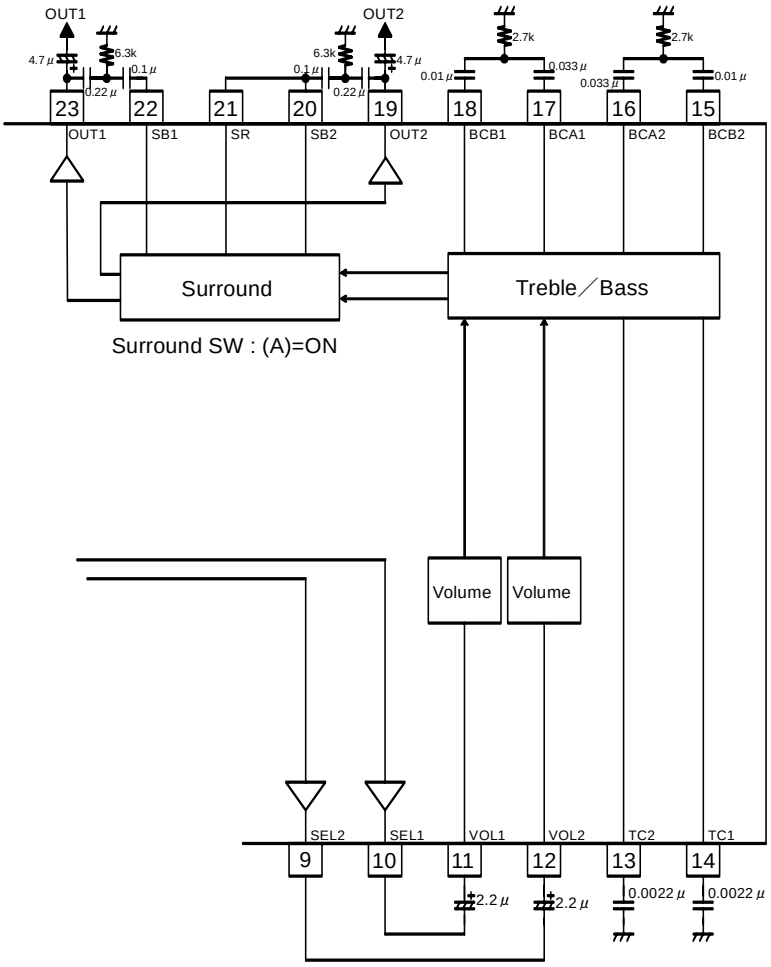

Figure 34. The application circuit example of easy 3band

6-2. The representative characteristic of easy 3band

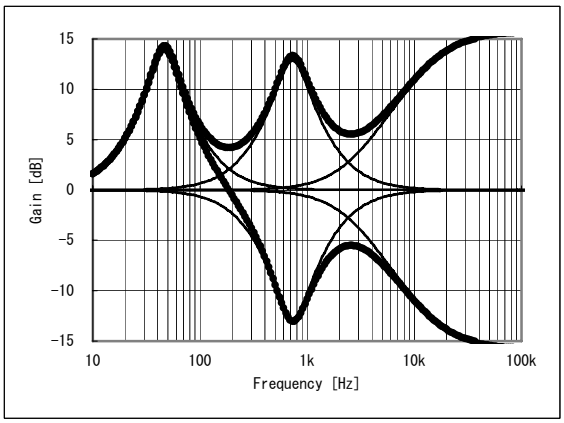

Figure 35. The representative characteristic of easy 3band

© 2012 ROHM Co., Ltd. All rights reserved.

13.The application circuit example at the addition function unused time

・At the addition function unused time, it is Surround Gain=OFF, Surround SW : Use in (A)=ON.
・Surround SW : Be careful because it damages output (23pin, 19pin) short-circuiting next, a characteristic when having made (B)=ON.

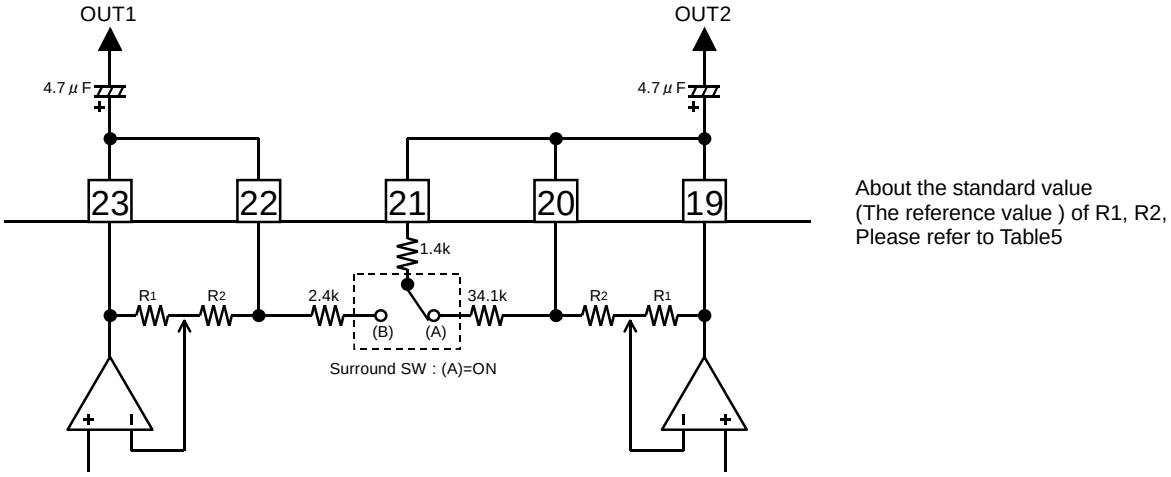

Figure 36. The application circuit example at the addition function unused time

14. The use example of INPUT SHORT function

・The INPUT SHORT function makes input impedance RIN small in the switch control and it charges rapidly in external coupling capacitance.
・The DC bias voltage of the input terminal can be rapidly changed to regular condition (1/2VCC) in transmitting I2C BUS direction immediately after power start-up and working this function.
・Always use INPUT SHORT function in the signal less condition and give it.

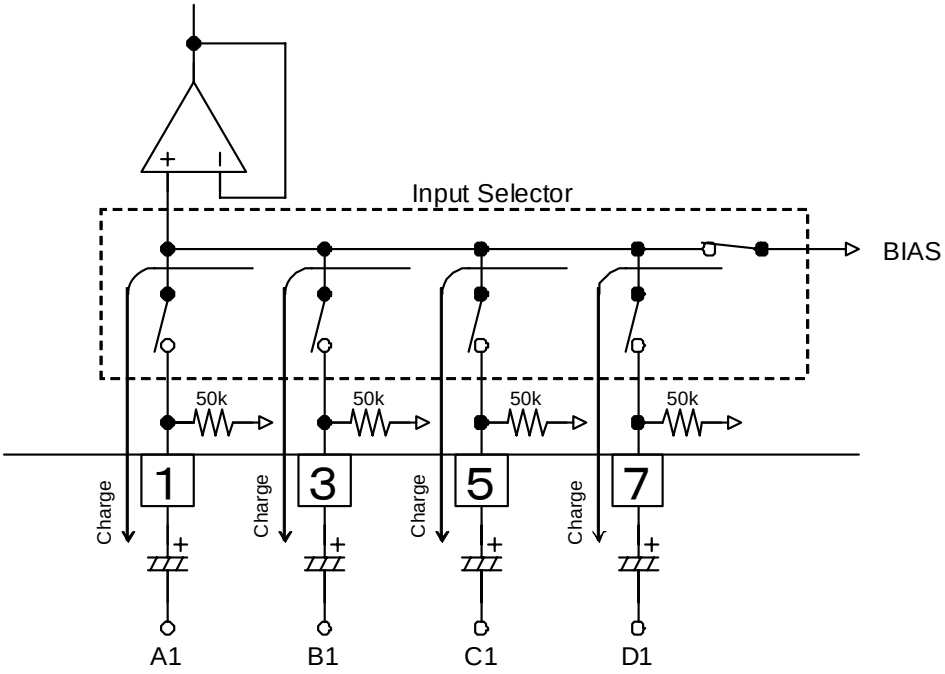

Figure 37. About INPUT SHORT mode（The illustration only of 1ch）

© 2012 ROHM Co., Ltd. All rights reserved.

15. The use example The microphone input

・Because the input impedance of VOL1(11pin) and VOL2(12pin) is constant(50kohm(TYP)) even if it changes the setting attenuation quantity of VOLUME, the outside sound signal can be added to this terminal. It is possible to use as the microphone input terminal.
・Because it is a resistance addition to the VOL1 and VOL2 terminal, the signal level of this terminal (VOL1, VOL2) is decided by the addition quantity and works VOLUME to the signal level.

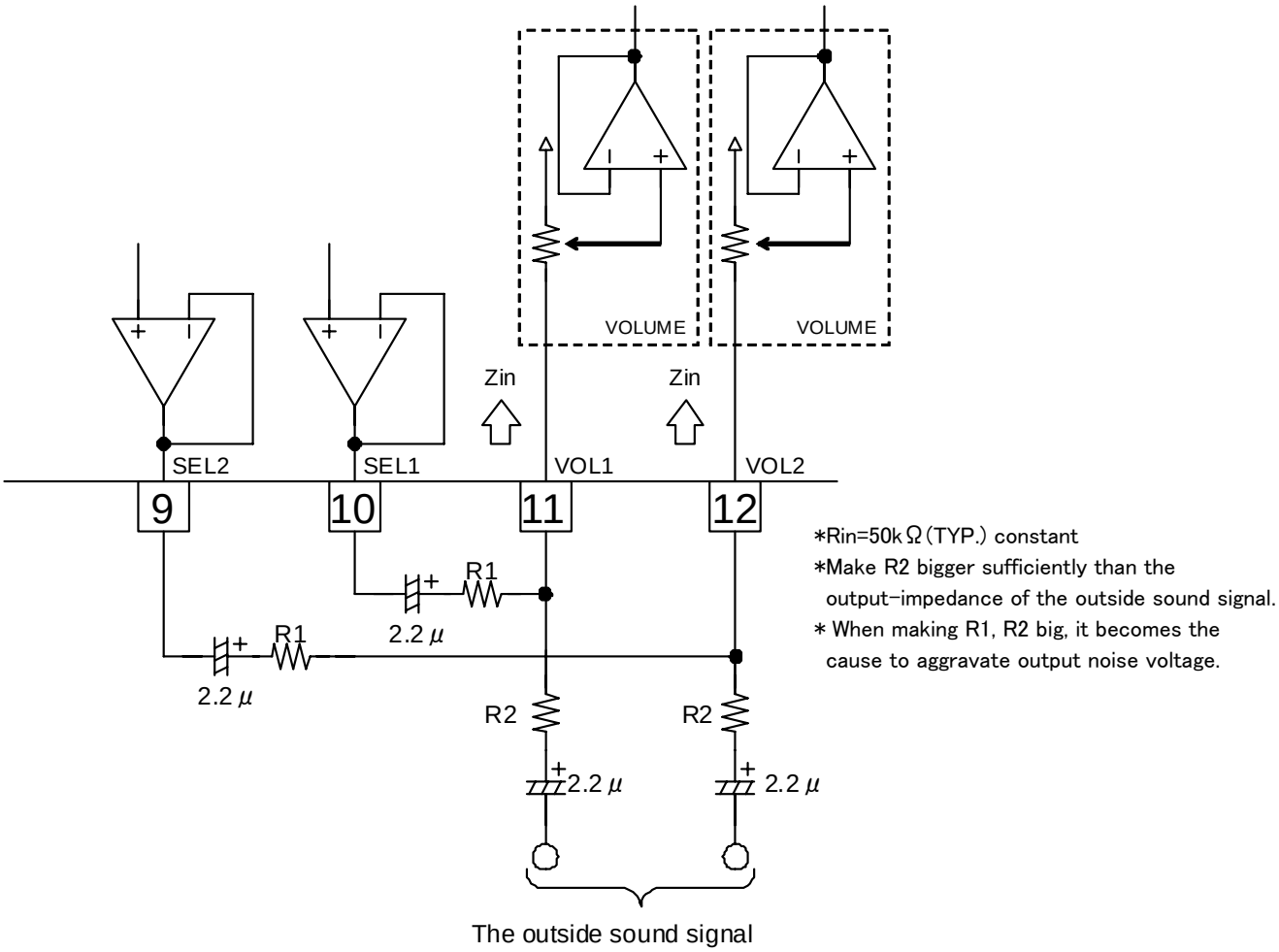

Figure 38. The application circuit example in microphone input use

Status of this document
The Japanese version of this document is the formal specification. A customer may use this translation only for a reference to help reading the formal version. If there are any differences in translation version of this document, formal version takes priority.

© 2012 ROHM Co., Ltd. All rights reserved.

●Ordering Information

B D 3 4 9 0 F V	E 2
Part Number	Package FV: SSOP-B28
	Packaging and forming specification E2: Embossed tape and reel (SSOP-B28)

●Physical Dimension Tape and Reel Information

SSOP-B28

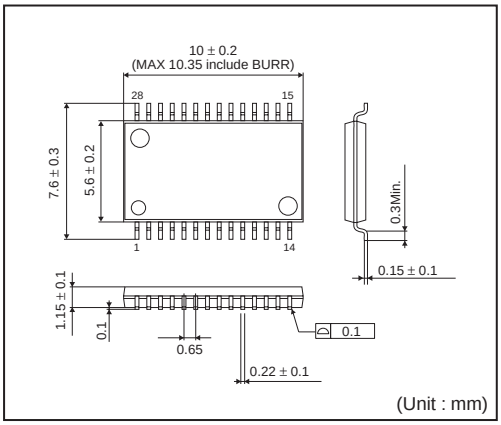

<Tape and Reel information>

Tape	Embossed carrier tape
Quantity	2000pcs
Direction of feed	E2 (The direction is the 1pin of product is at the upper left when you hold reel on the left hand and you pull out the tape on the right hand)

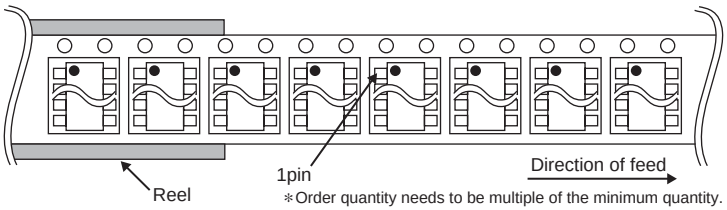

∗Order quantity needs to be multiple of the minimum quantity.

●**Marking Diagram(s)(TOP VIEW)**

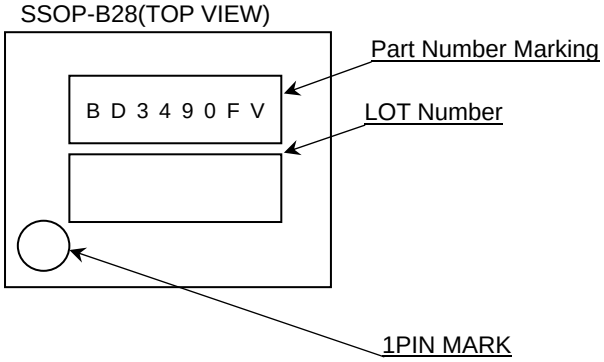

© 2012 ROHM Co., Ltd. All rights reserved.

●Revision history

Date	Revision	Changes
5.Oct.2012	001	New Release

© 2012 ROHM Co., Ltd. All rights reserved.

Notice

Precaution on using ROHM Products

1. Our Products are designed and manufactured for application in ordinary electronic equipments (such as AV equipment, OA equipment, telecommunication equipment, home electronic appliances, amusement equipment, etc.). If you intend to use our Products in devices requiring extremely high reliability (such as medical equipment (Note 1), transport equipment, traffic equipment, aircraft/spacecraft, nuclear power controllers, fuel controllers, car equipment including car accessories, safety devices, etc.) and whose malfunction or failure may cause loss of human life, bodily injury or serious damage to property ("Specific Applications"), please consult with the ROHM sales representative in advance. Unless otherwise agreed in writing by ROHM in advance, ROHM shall not be in any way responsible or liable for any damages, expenses or losses incurred by you or third parties arising from the use of any ROHM's Products for Specific Applications.

(Note1) Medical Equipment Classification of the Specific Applications

JAPAN	USA	EU	CHINA
CLASSⅢ	CLASSⅢ	CLASSⅡb	CLASSⅢ
CLASSⅣ		CLASSⅢ	

2. ROHM designs and manufactures its Products subject to strict quality control system. However, semiconductor products can fail or malfunction at a certain rate. Please be sure to implement, at your own responsibilities, adequate safety measures including but not limited to fail-safe design against the physical injury, damage to any property, which a failure or malfunction of our Products may cause. The following are examples of safety measures:
   [a] Installation of protection circuits or other protective devices to improve system safety
   [b] Installation of redundant circuits to reduce the impact of single or multiple circuit failure

3. Our Products are designed and manufactured for use under standard conditions and not under any special or extraordinary environments or conditions, as exemplified below. Accordingly, ROHM shall not be in any way responsible or liable for any damages, expenses or losses arising from the use of any ROHM's Products under any special or extraordinary environments or conditions. If you intend to use our Products under any special or extraordinary environments or conditions (as exemplified below), your independent verification and confirmation of product performance, reliability, etc, prior to use, must be necessary:
   [a] Use of our Products in any types of liquid, including water, oils, chemicals, and organic solvents
   [b] Use of our Products outdoors or in places where the Products are exposed to direct sunlight or dust
   [c] Use of our Products in places where the Products are exposed to sea wind or corrosive gases, including Cl_2, H_2S, NH_3, SO_2, and NO_2
   [d] Use of our Products in places where the Products are exposed to static electricity or electromagnetic waves
   [e] Use of our Products in proximity to heat-producing components, plastic cords, or other flammable items
   [f] Sealing or coating our Products with resin or other coating materials
   [g] Use of our Products without cleaning residue of flux (even if you use no-clean type fluxes, cleaning residue of flux is recommended); or Washing our Products by using water or water-soluble cleaning agents for cleaning residue after soldering
   [h] Use of the Products in places subject to dew condensation

4. The Products are not subject to radiation-proof design.

5. Please verify and confirm characteristics of the final or mounted products in using the Products.

6. In particular, if a transient load (a large amount of load applied in a short period of time, such as pulse. is applied, confirmation of performance characteristics after on-board mounting is strongly recommended. Avoid applying power exceeding normal rated power; exceeding the power rating under steady-state loading condition may negatively affect product performance and reliability.

7. De-rate Power Dissipation (Pd) depending on Ambient temperature (Ta). When used in sealed area, confirm the actual ambient temperature.

8. Confirm that operation temperature is within the specified range described in the product specification.

9. ROHM shall not be in any way responsible or liable for failure induced under deviant condition from what is defined in this document.

Precaution for Mounting / Circuit board design

1. When a highly active halogenous (chlorine, bromine, etc.) flux is used, the residue of flux may negatively affect product performance and reliability.

2. In principle, the reflow soldering method must be used; if flow soldering method is preferred, please consult with the ROHM representative in advance.

For details, please refer to ROHM Mounting specification

© 2014 ROHM Co., Ltd. All rights reserved.

Precautions Regarding Application Examples and External Circuits

1. If change is made to the constant of an external circuit, please allow a sufficient margin considering variations of the characteristics of the Products and external components, including transient characteristics, as well as static characteristics.

2. You agree that application notes, reference designs, and associated data and information contained in this document are presented only as guidance for Products use. Therefore, in case you use such information, you are solely responsible for it and you must exercise your own independent verification and judgment in the use of such information contained in this document. ROHM shall not be in any way responsible or liable for any damages, expenses or losses incurred by you or third parties arising from the use of such information.

Precaution for Electrostatic

This Product is electrostatic sensitive product, which may be damaged due to electrostatic discharge. Please take proper caution in your manufacturing process and storage so that voltage exceeding the Products maximum rating will not be applied to Products. Please take special care under dry condition (e.g. Grounding of human body / equipment / solder iron, isolation from charged objects, setting of Ionizer, friction prevention and temperature / humidity control).

Precaution for Storage / Transportation

1. Product performance and soldered connections may deteriorate if the Products are stored in the places where:
   [a] the Products are exposed to sea winds or corrosive gases, including Cl2, H2S, NH3, SO2, and NO2
   [b] the temperature or humidity exceeds those recommended by ROHM
   [c] the Products are exposed to direct sunshine or condensation
   [d] the Products are exposed to high Electrostatic

2. Even under ROHM recommended storage condition, solderability of products out of recommended storage time period may be degraded. It is strongly recommended to confirm solderability before using Products of which storage time is exceeding the recommended storage time period.

3. Store / transport cartons in the correct direction, which is indicated on a carton with a symbol. Otherwise bent leads may occur due to excessive stress applied when dropping of a carton.

4. Use Products within the specified time after opening a humidity barrier bag. Baking is required before using Products of which storage time is exceeding the recommended storage time period.

Precaution for Product Label

QR code printed on ROHM Products label is for ROHM's internal use only.

Precaution for Disposition

When disposing Products please dispose them properly using an authorized industry waste company.

Precaution for Foreign Exchange and Foreign Trade act

Since our Products might fall under controlled goods prescribed by the applicable foreign exchange and foreign trade act, please consult with ROHM representative in case of export.

Precaution Regarding Intellectual Property Rights

1. All information and data including but not limited to application example contained in this document is for reference only. ROHM does not warrant that foregoing information or data will not infringe any intellectual property rights or any other rights of any third party regarding such information or data. ROHM shall not be in any way responsible or liable for infringement of any intellectual property rights or other damages arising from use of such information or data.:

2. No license, expressly or implied, is granted hereby under any intellectual property rights or other rights of ROHM or any third parties with respect to the information contained in this document.

Other Precaution

1. This document may not be reprinted or reproduced, in whole or in part, without prior written consent of ROHM.

2. The Products may not be disassembled, converted, modified, reproduced or otherwise changed without prior written consent of ROHM.

3. In no event shall you use in any way whatsoever the Products and the related technical information contained in the Products or this document for any military purposes, including but not limited to, the development of mass-destruction weapons.

4. The proper names of companies or products described in this document are trademarks or registered trademarks of ROHM, its affiliated companies or third parties.

© 2014 ROHM Co., Ltd. All rights reserved.

General Precaution

1. Before you use our Products, you are requested to carefully read this document and fully understand its contents. ROHM shall not be in any way responsible or liable for failure, malfunction or accident arising from the use of any ROHM's Products against warning, caution or note contained in this document.

2. All information contained in this document is current as of the issuing date and subject to change without any prior notice. Before purchasing or using ROHM's Products, please confirm the latest information with a ROHM sales representative.

3. The information contained in this document is provided on an "as is" basis and ROHM does not warrant that all information contained in this document is accurate and/or error-free. ROHM shall not be in any way responsible or liable for any damages, expenses or losses incurred by you or third parties resulting from inaccuracy or errors of or concerning such information.

© 2014 ROHM Co., Ltd. All rights reserved.

Mouser Electronics

Authorized Distributor

Click to View Pricing, Inventory, Delivery & Lifecycle Information:

ROHM Semiconductor:

BD3490FV-E2