Operational Amplifier

Automotive Low Noise & Input/Output Rail-to-Rail High Speed CMOS Operational Amplifier

BD7281YG-C

General Description

BD7281YG-C is an Input/Output Rail-to-Rail single CMOS operational amplifier. It features high slew rate, low noise and low input bias current. It is suitable for automotive requirements such as engine control unit, electric power steering, anti-lock braking system, sensor amplifier, and so on.
Furthermore, this circuit type does not oscillate even with a capacitance of 1 nF. Set design is possible without worrying about oscillation due to output capacitance.

Features

- Nano Cap™ Integrated OPAMP
- AEC-Q100 Qualified(Note 1)
- Low Input-Referred Noise Voltage Density
- Input/Output Rail-to-Rail

(Note 1) Grade 1

Applications

- Engine Control Unit
- Electric Power Steering (EPS)
- Anti-lock Braking System (ABS)
- Automotive Electronics
- Sensor Amplifiers
- Battery-powered Equipment
- Current Monitoring Amplifier
- ADC Front Ends, Buffer Amplifier
- Photodiode Amplifier
- Amplifiers

Key Specifications

- Input Offset Voltage: 2 mV (Max)
- Slew Rate: 10 V/μs (Typ)
- Input-Referred Noise Voltage Density f = 1 kHz: 12 nV/√Hz (Typ)
- Common-mode Input Voltage Range: V_{SS} to V_{DD}
- Input Bias Current: 0.5 pA (Typ)
- Operating Supply Voltage Range
  - Single Supply: 2.5 V to 5.5 V
  - Dual Supply: ±1.25 V to ±2.75 V
- Operating Temperature Range: -40 °C to +125 °C

Package	W (Typ) x D (Typ) x H (Max)
SSOP5	2.9 mm x 2.8 mm x 1.25 mm

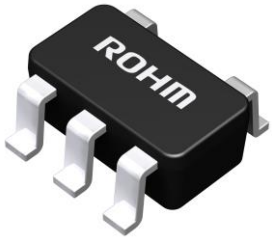

Typical Application Circuit

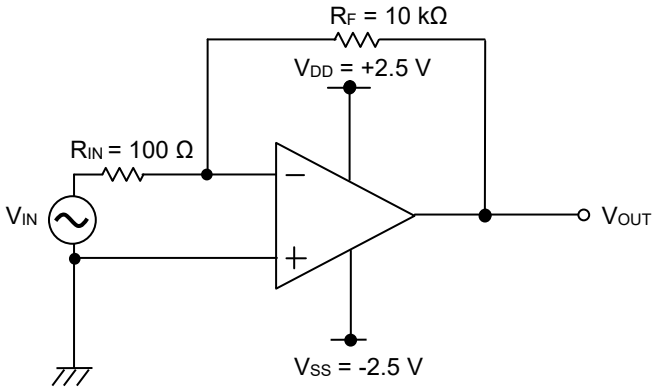

$$V_{OUT} = -\frac{R_F}{R_{IN}} V_{IN}$$

Nano Cap™ is a trademark or a registered trademark of ROHM Co., Ltd.

○Product structure : Silicon integrated circuit ○This product has no designed protection against radioactive rays.

© 2022 ROHM Co., Ltd. All rights reserved.

Pin Configuration

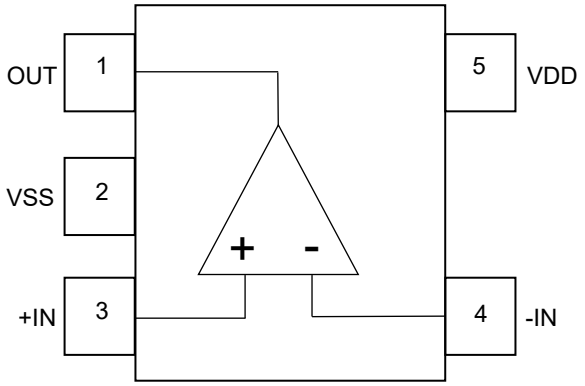

(TOP VIEW)

Pin Description

Pin No.	Pin Name	Function
1	OUT	Output
2	VSS	Negative power supply / Ground
3	+IN	Non-inverting input
4	-IN	Inverting input
5	VDD	Positive power supply

Block Diagram

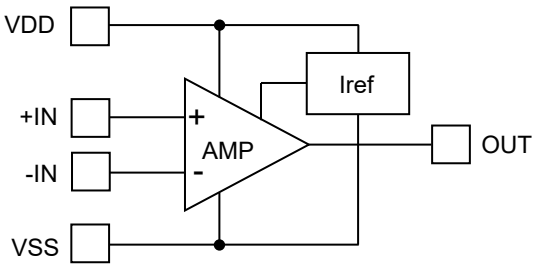

Description of Blocks

1. AMP:
   This block is a full-swing output operational amplifier with class-AB output circuit and high-precision-Rail-to-Rail differential input stage.

2. Iref:
   This block supplies reference current which is needed to operate AMP block.

© 2022 ROHM Co., Ltd. All rights reserved.

Absolute Maximum Ratings (Ta = 25 °C)

Parameter	Symbol	Rating	Unit
Supply Voltage (V_{DD} - V_{SS})	V_S	7.0	V
Input Pin Voltage (+IN, -IN)	V_I	(V_{SS} - 0.3) to (V_{DD} + 0.3)	V
Input Pin Current (+IN, -IN)	I_I	±10	mA
Maximum Junction Temperature	Tjmax	150	°C
Storage Temperature Range	Tstg	-55 to +150	°C

Caution 1: *Operating the IC over the absolute maximum ratings may damage the IC. The damage can either be a short circuit between pins or an open circuit between pins and the internal circuitry. Therefore, it is important to consider circuit protection measures, such as adding a fuse, in case the IC is operate over the absolute maximum ratings.*

Caution 2: *Should by any chance the maximum junction temperature rating be exceeded the rise in temperature of the chip may result in deterioration of the properties of the chip. In case of exceeding this absolute maximum rating, design a PCB with thermal resistance taken into consideration by increasing board size and copper area so as not to exceed the maximum junction temperature rating.*

Thermal Resistance*(Note 1)*

Parameter	Symbol	Thermal Resistance (Typ)		Unit
		1s*(Note 3)*	2s2p*(Note 4)*	
SSOP5				
Junction to Ambient	θ_{JA}	376.5	185.4	°C/W
Junction to Top Characterization Parameter*(Note 2)*	Ψ_{JT}	40	30	°C/W

(Note 1) Based on JESD51-2A(Still-Air).
(Note 2) The thermal characterization parameter to report the difference between junction temperature and the temperature at the top center of the outside surface of the component package.
(Note 3) Using a PCB board based on JESD51-3.
(Note 4) Using a PCB board based on JESD51-7.

Layer Number of Measurement Board	Material	Board Size
Single	FR-4	114.3 mm x 76.2 mm x 1.57 mmt

Top	
Copper Pattern	Thickness
Footprints and Traces	70 µm

Layer Number of Measurement Board	Material	Board Size
4 Layers	FR-4	114.3 mm x 76.2 mm x 1.6 mmt

Top		2 Internal Layers		Bottom	
Copper Pattern	Thickness	Copper Pattern	Thickness	Copper Pattern	Thickness
Footprints and Traces	70 µm	74.2 mm x 74.2 mm	35 µm	74.2 mm x 74.2 mm	70 µm

Recommended Operating Conditions

Parameter		Symbol	Min	Typ	Max	Unit
Supply Voltage (V_{DD} - V_{SS})	Single Supply	V_S	2.5	5.0	5.5	V
	Dual Supply		±1.25	±2.50	±2.75	
Operating Temperature		Topr	-40	+25	+125	°C

© 2022 ROHM Co., Ltd. All rights reserved.

Function Explanation

1. Nano Cap™
   Nano Cap™ is a combination of technologies which allow stable operation even if output capacitance is connected with the range of nF unit. This circuit type does not oscillate even with a capacitance of 1 nF. Set design is possible without worrying about oscillation due to output capacitance.

© 2022 ROHM Co., Ltd. All rights reserved.

Electrical Characteristics

(Unless otherwise specified V_S = 5 V, V_{SS} = 0 V, V_{ICM} = 2.5 V, R_L = 10 kΩ to V_{ICM}, Ta = 25 °C)

Parameter	Symbol	Limit			Unit	Conditions
		Min	Typ	Max		
Input Offset Voltage	V_{IO}	-	0.01	1.60	mV	No load, Absolute value
		-	-	2		No load, Absolute value, Ta = -40 °C to +125 °C
Input Offset Voltage Temperature Drift	$\Delta V_{IO}/\Delta T$	-	0.1	4.0	μV/°C	No load, Absolute value, Ta = -40 °C to +125 °C
Input Offset Current	I_{IO}	-	0	-	pA	Absolute value
Input Bias Current	I_B	-	0.5	-	pA	Absolute value
Common-mode Input Voltage Range	V_{ICMR}	0	-	5	V	V_{SS} to V_{DD}
Supply Current	I_{DD}	-	1.7	2.6	mA	No load, G = 0 dB
		-	-	2.8		No load, G = 0 dB, Ta = -40 °C to +125 °C
Output Voltage High	V_{OH}	4.97	4.99	-	V	-
		4.95	-	-		Ta = -40 °C to +125 °C
Output Voltage Low	V_{OL}	-	10	30	mV	-
		-	-	50		Ta = -40 °C to +125 °C
Output Source Current *(Note 1)*	I_{OH}	25	50	-	mA	V_{OUT} = V_{SS}, Absolute value
Output Sink Current *(Note 1)*	I_{OL}	25	50	-	mA	V_{OUT} = V_{DD}, Absolute value
Large Signal Voltage Gain	A_V	95	115	-	dB	-
		75	-	-		Ta = -40 °C to +125 °C
Gain Bandwidth Product	GBW	-	7	-	MHz	G = 40 dB, C_L = 25 pF
Phase Margin	θ	-	65	-	deg	G = 40 dB, C_L = 25 pF
Common-mode Rejection Ratio	CMRR	65	100	-	dB	-
Power Supply Rejection Ratio	PSRR	65	100	-	dB	-
Slew Rate	SR	-	10	-	V/μs	C_L = 100 pF
		5	-	-		C_L = 100 pF, Ta = -40 °C to +125 °C
Input-Referred Noise Voltage Density	Vn	-	12	-	nV/√Hz	f = 1 kHz
Total Harmonic Distortion + Noise	THD+N	-	0.001	-	%	V_{OUT} = 4 Vp-p, f = 1 kHz

(Note 1) Consider the power dissipation of the IC under high temperature environment when selecting the output current value. When the output pin is short-circuited continuously, the output current may decrease due to the temperature rise by the heat generation of inside the IC.

© 2022 ROHM Co., Ltd. All rights reserved.

Typical Performance Curves
V_{SS} = 0 V

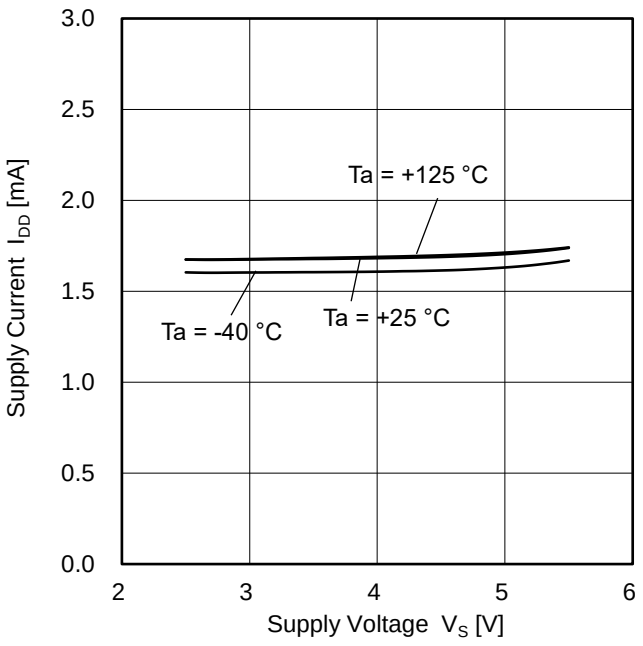

Figure 1. Supply Current vs Supply Voltage

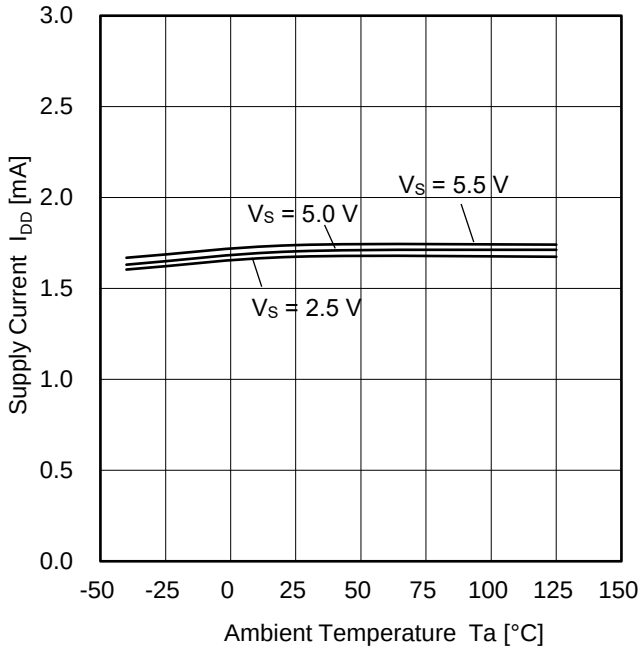

Figure 2. Supply Current vs Ambient Temperature

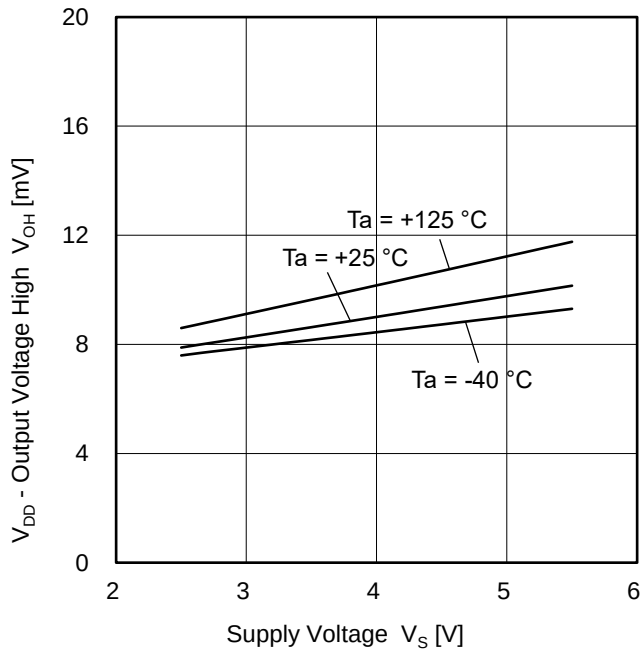

Figure 3. Output Voltage High vs Supply Voltage
(R_L = 10 kΩ)

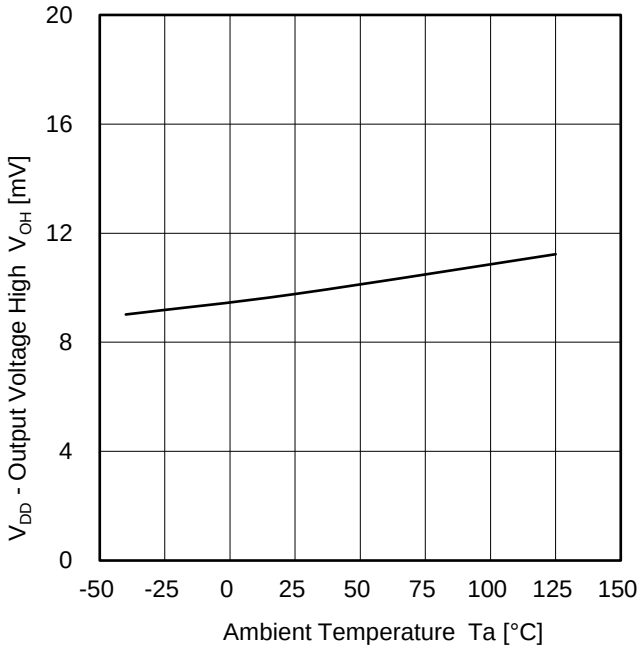

Figure 4. Output Voltage High vs Ambient Temperature
(V_S = 5 V, R_L = 10 kΩ)

(Note) The above data is measurement value of typical sample, it is not guaranteed.

© 2022 ROHM Co., Ltd. All rights reserved.

Typical Performance Curves - continued
V_{SS} = 0 V

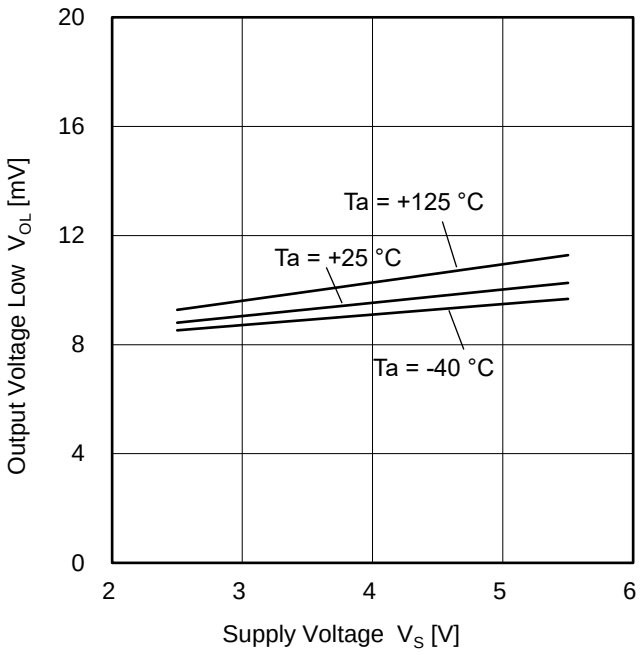

Figure 5. Output Voltage Low vs Supply Voltage
(R_L = 10 kΩ)

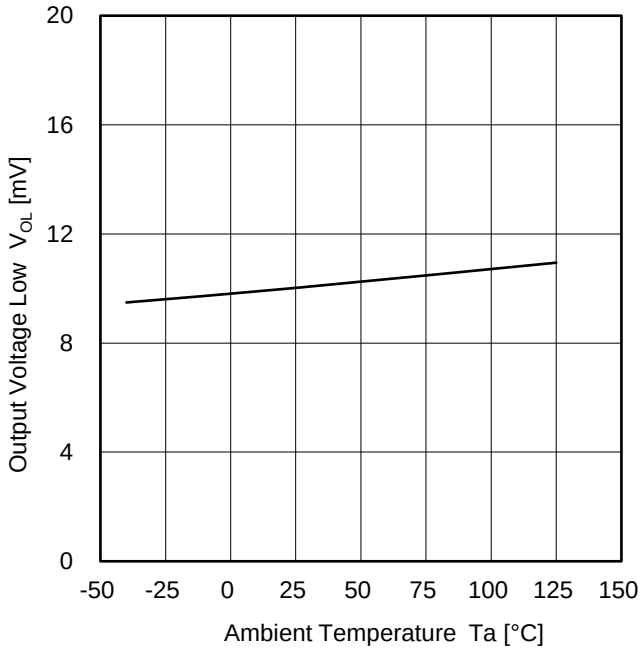

Figure 6. Output Voltage Low vs Ambient Temperature
(V_S = 5 V, R_L = 10 kΩ)

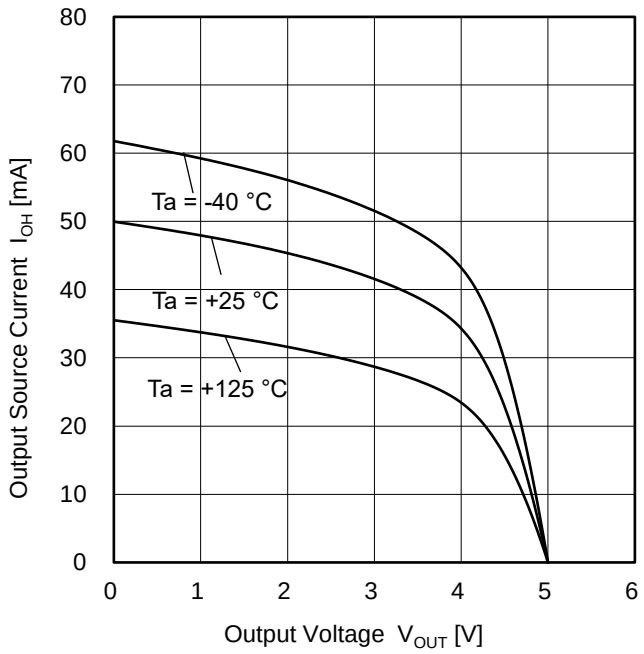

Figure 7. Output Source Current vs Output Voltage
(V_S = 5 V)

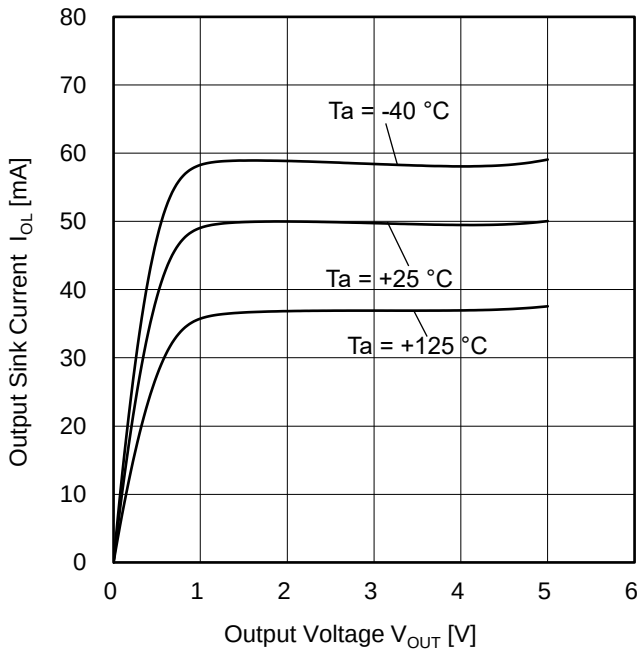

Figure 8. Output Sink Current vs Output Voltage
(V_S = 5 V)

(Note) The above data is measurement value of typical sample, it is not guaranteed.

© 2022 ROHM Co., Ltd. All rights reserved.

Typical Performance Curves - continued
V_{SS} = 0 V

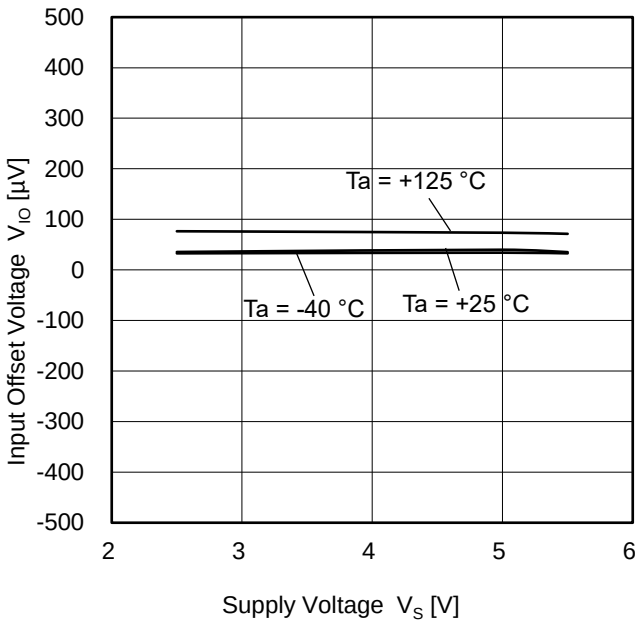

Figure 9. Input Offset Voltage vs Supply Voltage

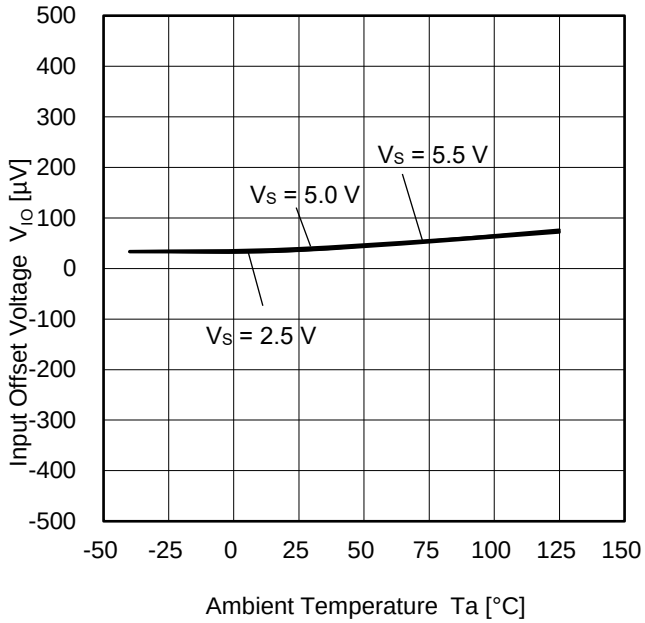

Figure 10. Input Offset Voltage vs Ambient Temperature

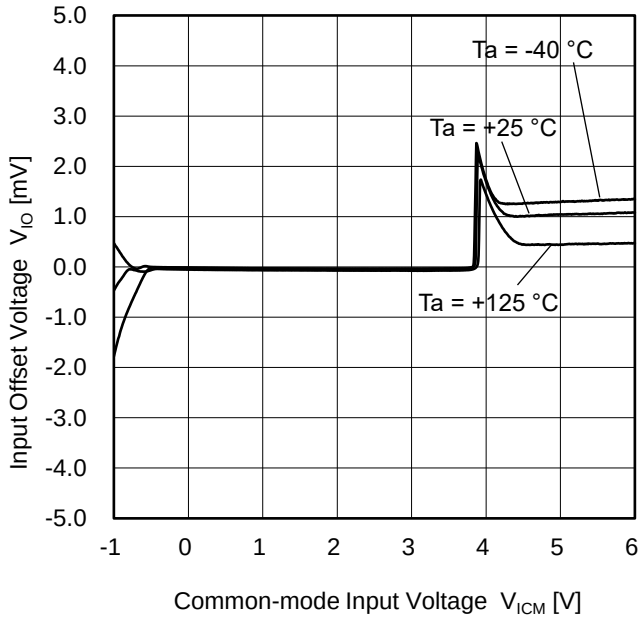

Figure 11. Input Offset Voltage vs Common-mode Input Voltage
(V_S = 5 V)

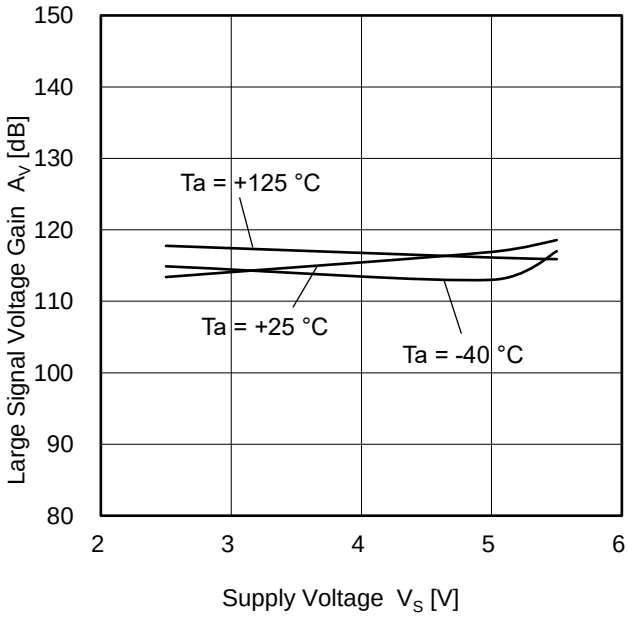

Figure 12. Large Signal Voltage Gain vs Supply Voltage
(R_L = 10 kΩ)

(Note) The above data is measurement value of typical sample, it is not guaranteed.

© 2022 ROHM Co., Ltd. All rights reserved.

Typical Performance Curves - continued
V_{SS} = 0 V

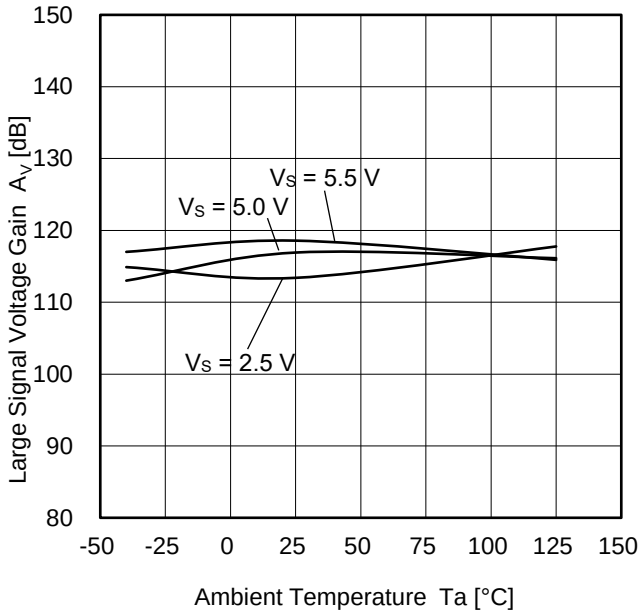

Figure 13. Large Signal Voltage Gain vs Ambient Temperature

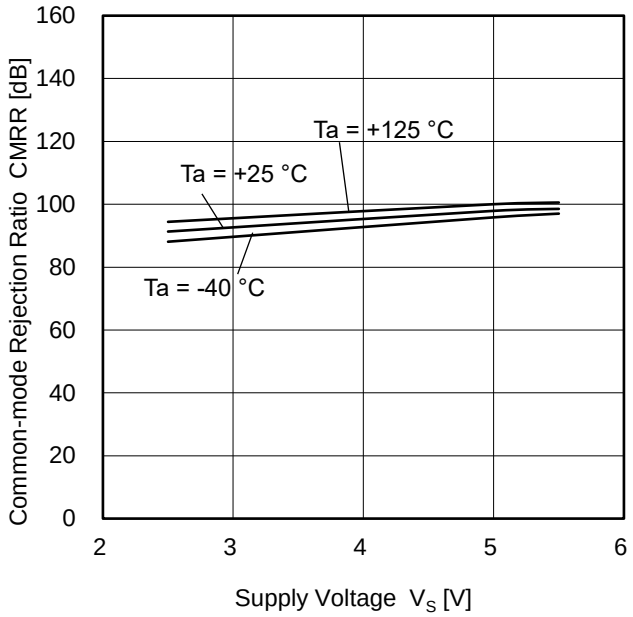

Figure 14. Common-mode Rejection Ratio vs Supply Voltage

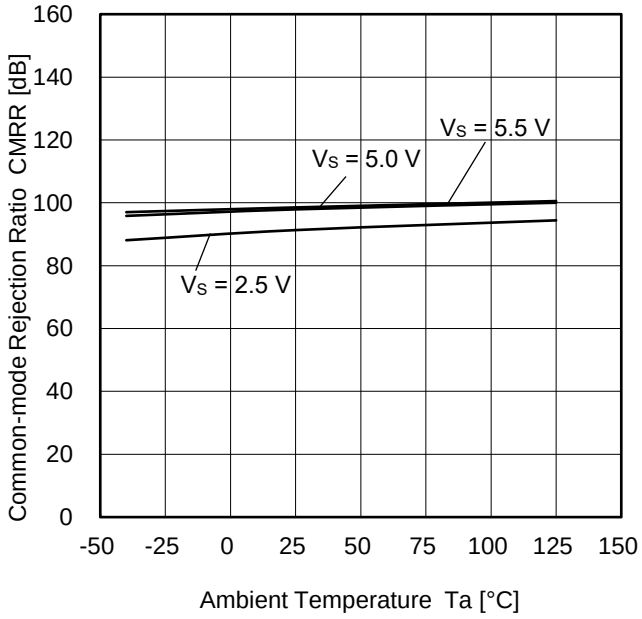

Figure 15. Common-mode Rejection Ratio vs Ambient Temperature

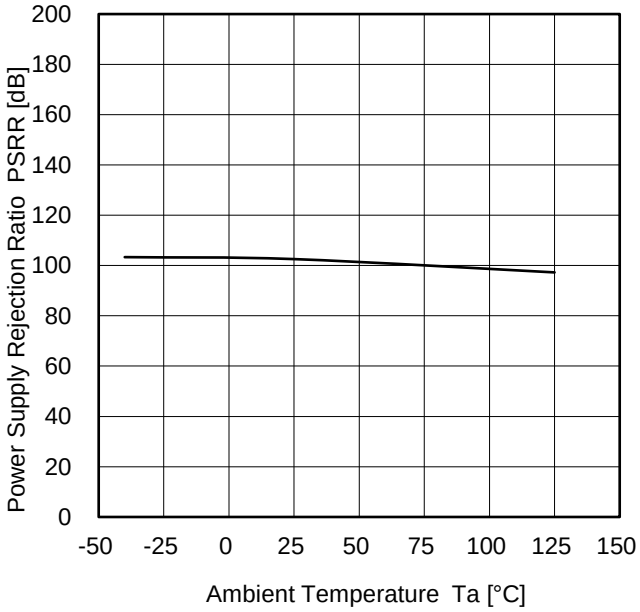

Figure 16. Power Supply Rejection Ratio vs Ambient Temperature

(Note) The above data is measurement value of typical sample, it is not guaranteed.

© 2022 ROHM Co., Ltd. All rights reserved.

Typical Performance Curves - continued
V_{SS} = 0 V

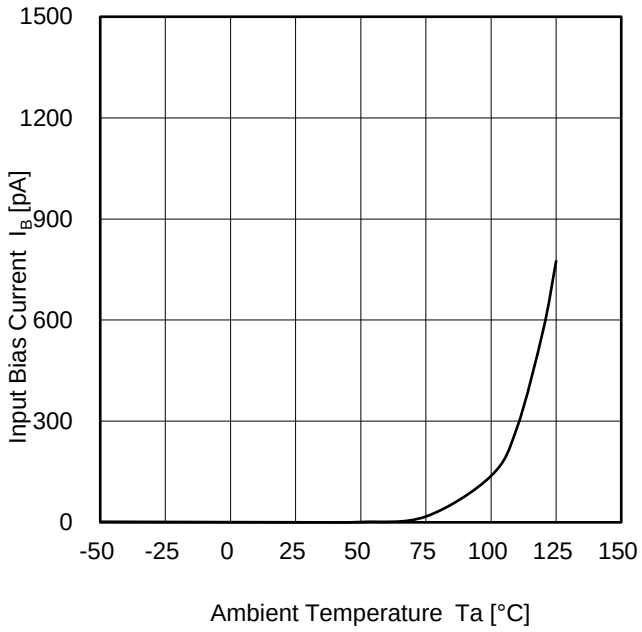

Figure 17. Input Bias Current vs Ambient Temperature
(V_S = 5 V)

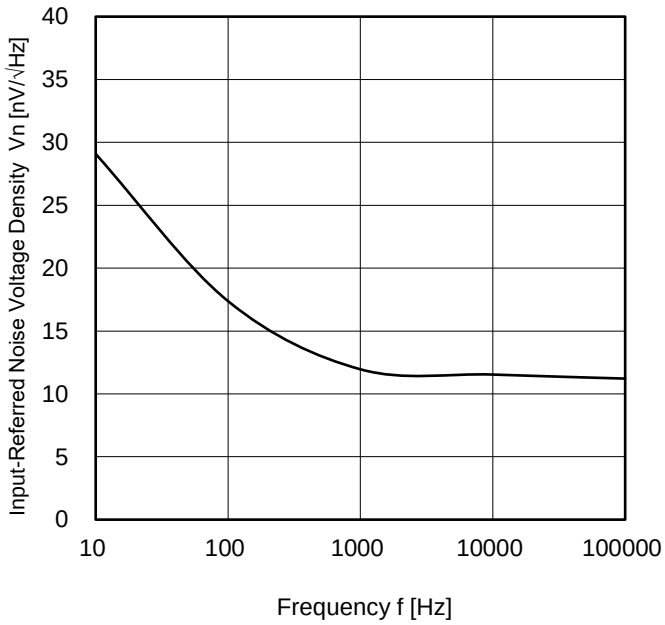

Figure 18. Input-Referred Noise Voltage Density vs Frequency
(V_S = 5 V)

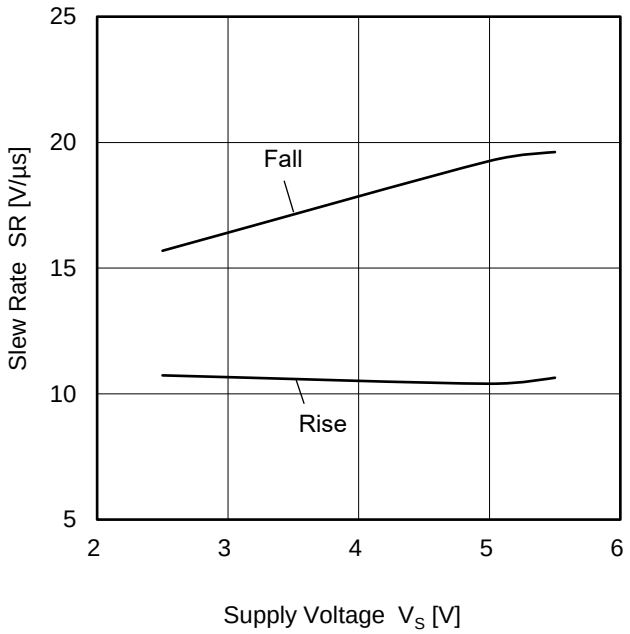

Figure 19. Slew Rate vs Supply Voltage

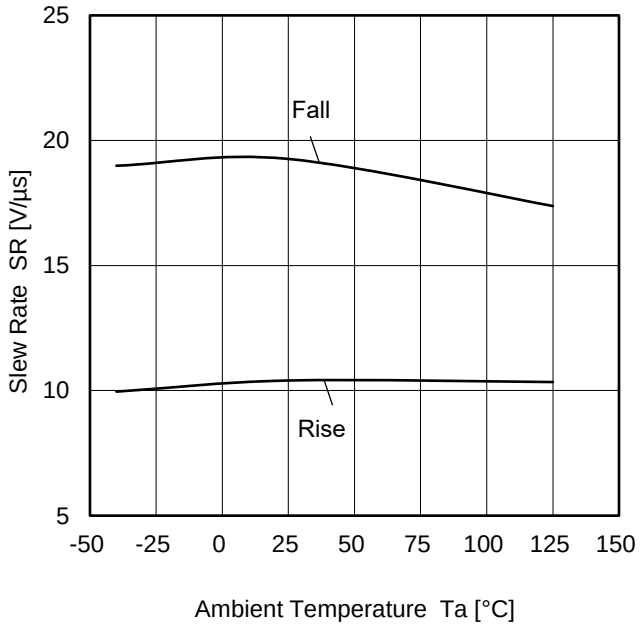

Figure 20. Slew Rate vs Ambient Temperature
(V_S = 5 V)

(Note) The above data is measurement value of typical sample, it is not guaranteed.

© 2022 ROHM Co., Ltd. All rights reserved.

Typical Performance Curves - continued
V_{SS} = 0 V

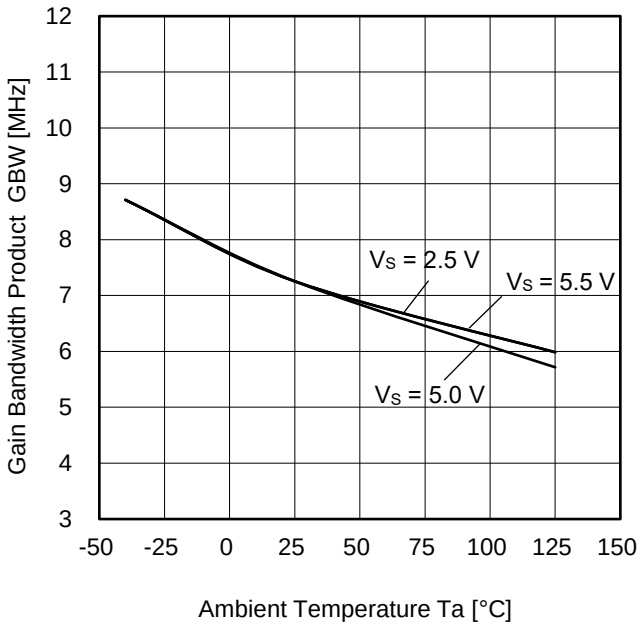

Figure 21. Gain Bandwidth Product vs Ambient Temperature

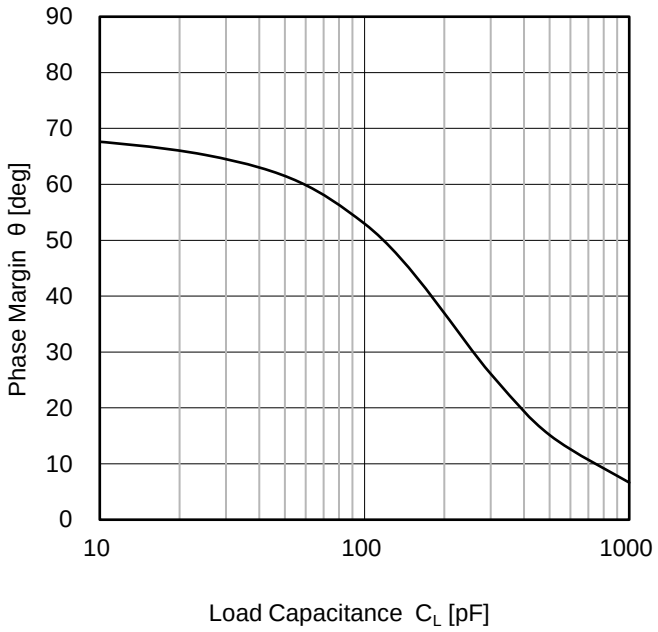

Figure 22. Phase Margin vs Load Capacitance
(V_S = 5 V, R_F = 10 kΩ, G = 40 dB)

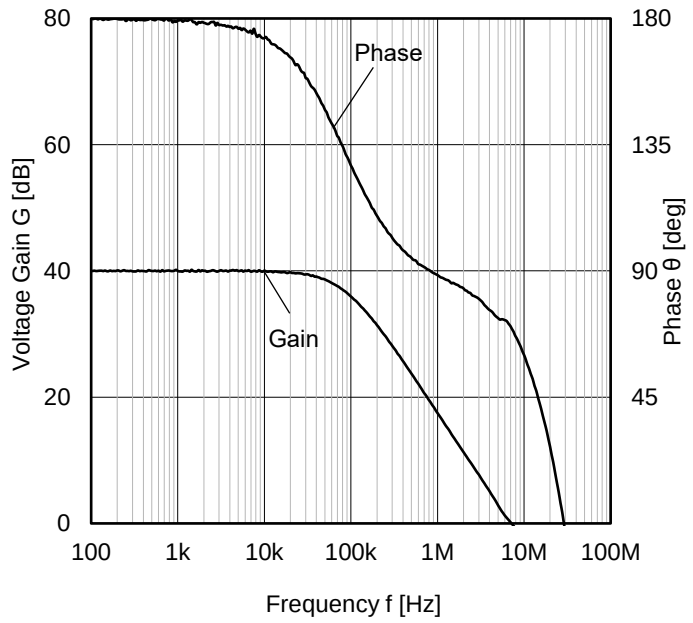

Figure 23. Voltage Gain, Phase vs Frequency
(V_S = 5 V)

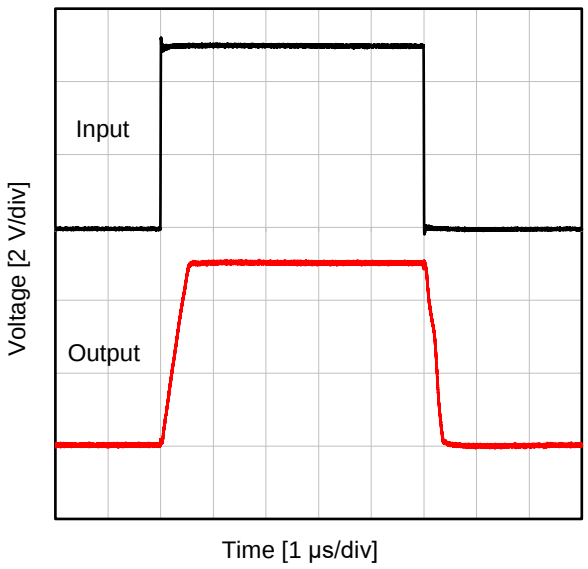

Figure 24. Large-Signal Step Response
(V_S = 5 V, G = 0 dB, R_L = 10 kΩ, C_L = 100 pF)

(Note) The above data is measurement value of typical sample, it is not guaranteed.

© 2022 ROHM Co., Ltd. All rights reserved.

Application Examples

○Voltage Follower

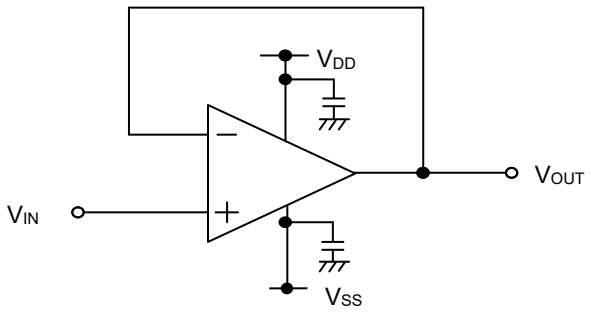

Figure 25. Voltage Follower Circuit

Using this circuit, the output voltage (V_{OUT}) is configured to be equal to the input voltage (V_{IN}). This circuit also stabilizes the output voltage due to high input impedance and low output impedance. Computation for output voltage is shown below.

$$V_{OUT} = V_{IN}$$

○Inverting Amplifier

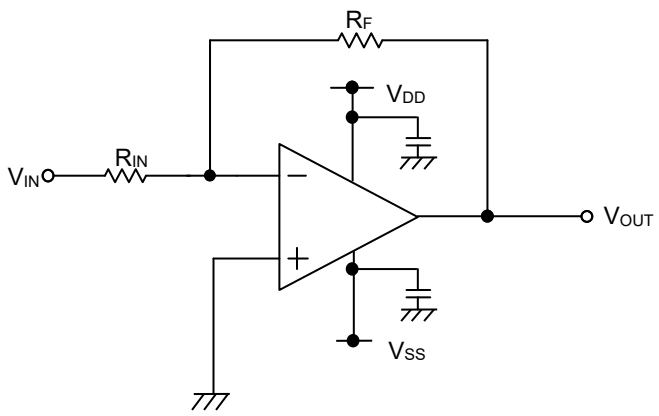

Figure 26. Inverting Amplifier Circuit

For inverting amplifier, input voltage (V_{IN}) is amplified by a voltage gain which depends on the ratio of R_{IN} and R_F, and then it outputs phase-inverted voltage. The output voltage is shown in the next expression.

$$V_{OUT} = -\frac{R_F}{R_{IN}} V_{IN}$$

This circuit has input impedance equal to R_{IN}.

○Non-inverting Amplifier

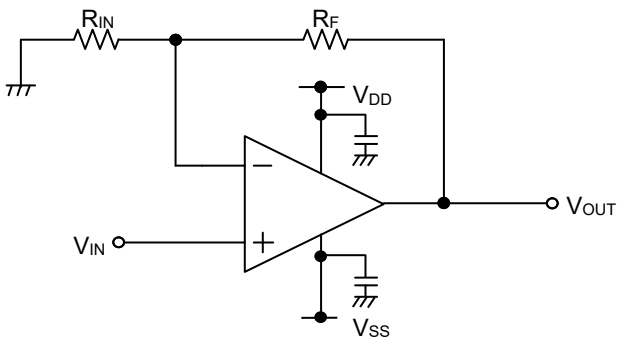

Figure 27. Non-inverting Amplifier Circuit

For non-inverting amplifier, input voltage (V_{IN}) is amplified by a voltage gain, which depends on the ratio of R_{IN} and R_F. The output voltage (V_{OUT}) is in-phase with the input voltage and is shown in the next expression.

$$V_{OUT} = \left(1 + \frac{R_F}{R_{IN}}\right) V_{IN}$$

Effectively, this circuit has high input impedance since its input side is the same as that of the operational amplifier.

© 2022 ROHM Co., Ltd. All rights reserved.

I/O Equivalence Circuits

Pin No.	Pin Name	Pin Description	Equivalence Circuit
1	OUT	Output	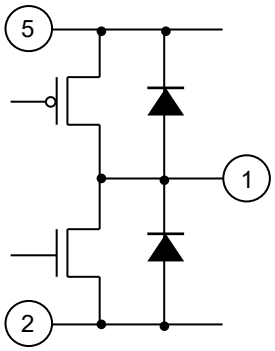
3 4	+IN -IN	Input	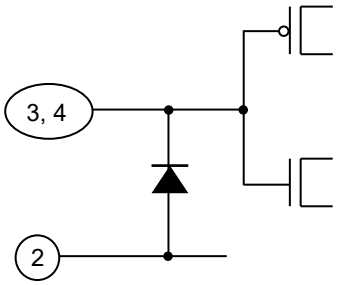

© 2022 ROHM Co., Ltd. All rights reserved.

Operational Notes

1. **Reverse Connection of Power Supply**
   Connecting the power supply in reverse polarity can damage the IC. Take precautions against reverse polarity when connecting the power supply, such as mounting an external diode between the power supply and the IC's power supply pins.

2. **Power Supply Lines**
   Design the PCB layout pattern to provide low impedance supply lines. Furthermore, connect a capacitor to ground at all power supply pins. Consider the effect of temperature and aging on the capacitance value when using electrolytic capacitors.

3. **Ground Voltage**
   Ensure that no pins are at a voltage below that of the ground pin at any time, even during transient condition.

4. **Ground Wiring Pattern**
   When using both small-signal and large-current ground traces, the two ground traces should be routed separately but connected to a single ground at the reference point of the application board to avoid fluctuations in the small-signal ground caused by large currents. Also ensure that the ground traces of external components do not cause variations on the ground voltage. The ground lines must be as short and thick as possible to reduce line impedance.

5. **Recommended Operating Conditions**
   The function and operation of the IC are guaranteed within the range specified by the recommended operating conditions. The characteristic values are guaranteed only under the conditions of each item specified by the electrical characteristics.

6. **Inrush Current**
   When power is first supplied to the IC, it is possible that the internal logic may be unstable and inrush current may flow instantaneously due to the internal powering sequence and delays, especially if the IC has more than one power supply. Therefore, give special consideration to power coupling capacitance, power wiring, width of ground wiring, and routing of connections.

7. **Testing on Application Boards**
   When testing the IC on an application board, connecting a capacitor directly to a low-impedance output pin may subject the IC to stress. Always discharge capacitors completely after each process or step. The IC's power supply should always be turned off completely before connecting or removing it from the test setup during the inspection process. To prevent damage from static discharge, ground the IC during assembly and use similar precautions during transport and storage.

8. **Inter-pin Short and Mounting Errors**
   Ensure that the direction and position are correct when mounting the IC on the PCB. Incorrect mounting may result in damaging the IC. Avoid nearby pins being shorted to each other especially to ground, power supply and output pin. Inter-pin shorts could be due to many reasons such as metal particles, water droplets (in very humid environment) and unintentional solder bridge deposited in between pins during assembly to name a few.

9. **Unused Input Pins**
   Input pins of an IC are often connected to the gate of a MOS transistor. The gate has extremely high impedance and extremely low capacitance. If left unconnected, the electric field from the outside can easily charge it. The small charge acquired in this way is enough to produce a significant effect on the conduction through the transistor and cause unexpected operation of the IC. So unless otherwise specified, unused input pins should be connected to the power supply or ground line.

© 2022 ROHM Co., Ltd. All rights reserved.

Operational Notes – continued

10. Regarding the Input Pin of the IC

This monolithic IC contains P+ isolation and P substrate layers between adjacent elements in order to keep them isolated. P-N junctions are formed at the intersection of the P layers with the N layers of other elements, creating a parasitic diode or transistor. For example (refer to figure below):

When GND > Pin A and GND > Pin B, the P-N junction operates as a parasitic diode.
When GND > Pin B, the P-N junction operates as a parasitic transistor.

Parasitic diodes inevitably occur in the structure of the IC. The operation of parasitic diodes can result in mutual interference among circuits, operational faults, or physical damage. Therefore, conditions that cause these diodes to operate, such as applying a voltage lower than the GND voltage to an input pin (and thus to the P substrate) should be avoided.

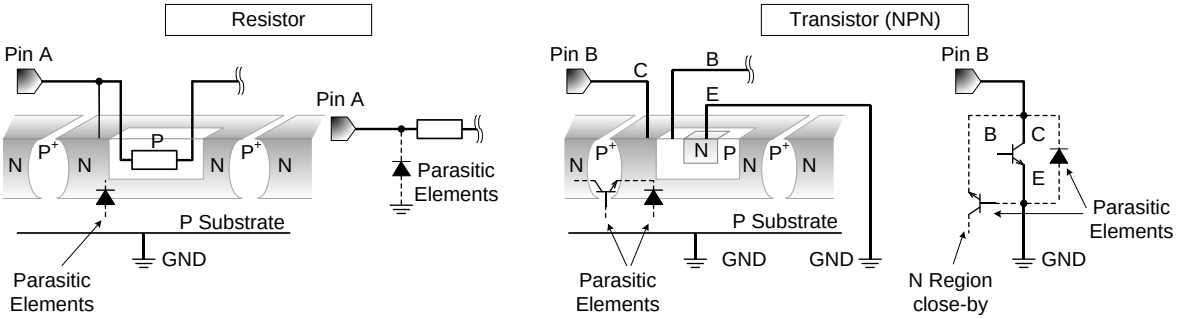

Figure 28. Example of Monolithic IC Structure

11. Ceramic Capacitor

When using a ceramic capacitor, determine a capacitance value considering the change of capacitance with temperature and the decrease in nominal capacitance due to DC bias and others.

© 2022 ROHM Co., Ltd. All rights reserved.

Ordering Information

B	D	7	2	8	1	Y	G	-	C	T	R

Package
G: SSOP5

Product Rank
C: for Automotive applications
Packaging and forming specification
TR: Embossed tape and reel

Marking Diagram

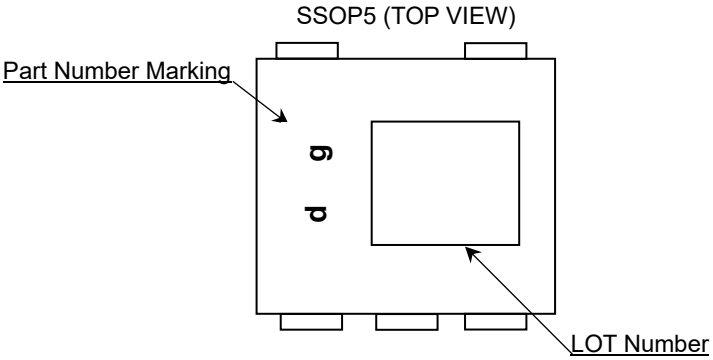

© 2022 ROHM Co., Ltd. All rights reserved.

Physical Dimension and Packing Information

Package Name	SSOP5

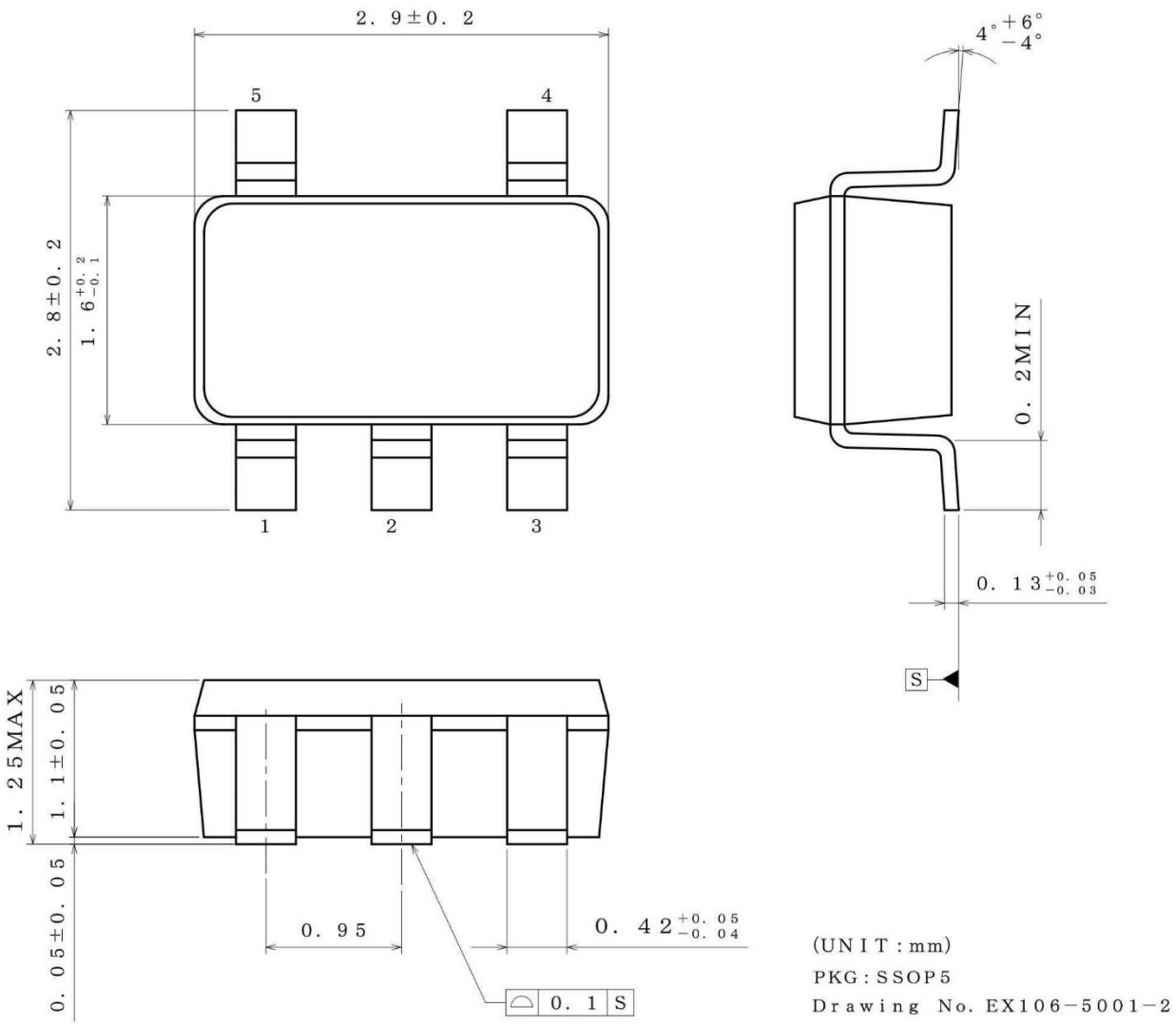

< Tape and Reel Information >

Tape	Embossed carrier tape
Quantity	3000pcs
Direction of feed	TR (The direction is the 1pin of product is at the upper right when you hold reel on the left hand and you pull out the tape on the right hand)

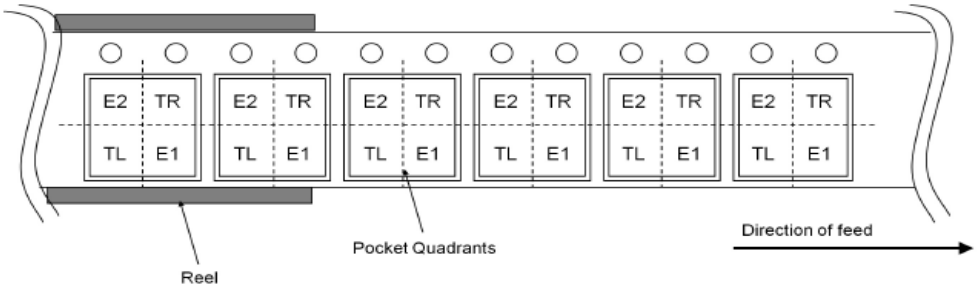

© 2022 ROHM Co., Ltd. All rights reserved.

Revision History

Date	Revision	Changes
08.Apr.2022	001	New Release

© 2022 ROHM Co., Ltd. All rights reserved.

Notice

Precaution on using ROHM Products

1. If you intend to use our Products in devices requiring extremely high reliability (such as medical equipment (Note 1), aircraft/spacecraft, nuclear power controllers, etc.) and whose malfunction or failure may cause loss of human life, bodily injury or serious damage to property ("Specific Applications"), please consult with the ROHM sales representative in advance. Unless otherwise agreed in writing by ROHM in advance, ROHM shall not be in any way responsible or liable for any damages, expenses or losses incurred by you or third parties arising from the use of any ROHM's Products for Specific Applications.

(Note1) Medical Equipment Classification of the Specific Applications

JAPAN	USA	EU	CHINA
CLASSⅢ	CLASSⅢ	CLASSⅡb	CLASSⅢ
CLASSⅣ		CLASSⅢ	

2. ROHM designs and manufactures its Products subject to strict quality control system. However, semiconductor products can fail or malfunction at a certain rate. Please be sure to implement, at your own responsibilities, adequate safety measures including but not limited to fail-safe design against the physical injury, damage to any property, which a failure or malfunction of our Products may cause. The following are examples of safety measures:
   [a] Installation of protection circuits or other protective devices to improve system safety
   [b] Installation of redundant circuits to reduce the impact of single or multiple circuit failure

3. Our Products are not designed under any special or extraordinary environments or conditions, as exemplified below. Accordingly, ROHM shall not be in any way responsible or liable for any damages, expenses or losses arising from the use of any ROHM's Products under any special or extraordinary environments or conditions. If you intend to use our Products under any special or extraordinary environments or conditions (as exemplified below), your independent verification and confirmation of product performance, reliability, etc, prior to use, must be necessary:
   [a] Use of our Products in any types of liquid, including water, oils, chemicals, and organic solvents
   [b] Use of our Products outdoors or in places where the Products are exposed to direct sunlight or dust
   [c] Use of our Products in places where the Products are exposed to sea wind or corrosive gases, including Cl_2, H_2S, NH_3, SO_2, and NO_2
   [d] Use of our Products in places where the Products are exposed to static electricity or electromagnetic waves
   [e] Use of our Products in proximity to heat-producing components, plastic cords, or other flammable items
   [f] Sealing or coating our Products with resin or other coating materials
   [g] Use of our Products without cleaning residue of flux (Exclude cases where no-clean type fluxes is used. However, recommend sufficiently about the residue.); or Washing our Products by using water or water-soluble cleaning agents for cleaning residue after soldering
   [h] Use of the Products in places subject to dew condensation

4. The Products are not subject to radiation-proof design.

5. Please verify and confirm characteristics of the final or mounted products in using the Products.

6. In particular, if a transient load (a large amount of load applied in a short period of time, such as pulse, is applied, confirmation of performance characteristics after on-board mounting is strongly recommended. Avoid applying power exceeding normal rated power; exceeding the power rating under steady-state loading condition may negatively affect product performance and reliability.

7. De-rate Power Dissipation depending on ambient temperature. When used in sealed area, confirm that it is the use in the range that does not exceed the maximum junction temperature.

8. Confirm that operation temperature is within the specified range described in the product specification.

9. ROHM shall not be in any way responsible or liable for failure induced under deviant condition from what is defined in this document.

Precaution for Mounting / Circuit board design

1. When a highly active halogenous (chlorine, bromine, etc.) flux is used, the residue of flux may negatively affect product performance and reliability.

2. In principle, the reflow soldering method must be used on a surface-mount products, the flow soldering method must be used on a through hole mount products. If the flow soldering method is preferred on a surface-mount products, please consult with the ROHM representative in advance.

For details, please refer to ROHM Mounting specification

© 2015 ROHM Co., Ltd. All rights reserved.

Precautions Regarding Application Examples and External Circuits

1. If change is made to the constant of an external circuit, please allow a sufficient margin considering variations of the characteristics of the Products and external components, including transient characteristics, as well as static characteristics.

2. You agree that application notes, reference designs, and associated data and information contained in this document are presented only as guidance for Products use. Therefore, in case you use such information, you are solely responsible for it and you must exercise your own independent verification and judgment in the use of such information contained in this document. ROHM shall not be in any way responsible or liable for any damages, expenses or losses incurred by you or third parties arising from the use of such information.

Precaution for Electrostatic

This Product is electrostatic sensitive product, which may be damaged due to electrostatic discharge. Please take proper caution in your manufacturing process and storage so that voltage exceeding the Products maximum rating will not be applied to Products. Please take special care under dry condition (e.g. Grounding of human body / equipment / solder iron, isolation from charged objects, setting of Ionizer, friction prevention and temperature / humidity control).

Precaution for Storage / Transportation

1. Product performance and soldered connections may deteriorate if the Products are stored in the places where:
   [a] the Products are exposed to sea winds or corrosive gases, including Cl_2, H_2S, NH_3, SO_2, and NO_2
   [b] the temperature or humidity exceeds those recommended by ROHM
   [c] the Products are exposed to direct sunshine or condensation
   [d] the Products are exposed to high Electrostatic

2. Even under ROHM recommended storage condition, solderability of products out of recommended storage time period may be degraded. It is strongly recommended to confirm solderability before using Products of which storage time is exceeding the recommended storage time period.

3. Store / transport cartons in the correct direction, which is indicated on a carton with a symbol. Otherwise bent leads may occur due to excessive stress applied when dropping of a carton.

4. Use Products within the specified time after opening a humidity barrier bag. Baking is required before using Products of which storage time is exceeding the recommended storage time period.

Precaution for Product Label

A two-dimensional barcode printed on ROHM Products label is for ROHM's internal use only.

Precaution for Disposition

When disposing Products please dispose them properly using an authorized industry waste company.

Precaution for Foreign Exchange and Foreign Trade act

Since concerned goods might be fallen under listed items of export control prescribed by Foreign exchange and Foreign trade act, please consult with ROHM in case of export.

Precaution Regarding Intellectual Property Rights

1. All information and data including but not limited to application example contained in this document is for reference only. ROHM does not warrant that foregoing information or data will not infringe any intellectual property rights or any other rights of any third party regarding such information or data.

2. ROHM shall not have any obligations where the claims, actions or demands arising from the combination of the Products with other articles such as components, circuits, systems or external equipment (including software).

3. No license, expressly or implied, is granted hereby under any intellectual property rights or other rights of ROHM or any third parties with respect to the Products or the information contained in this document. Provided, however, that ROHM will not assert its intellectual property rights or other rights against you or your customers to the extent necessary to manufacture or sell products containing the Products, subject to the terms and conditions herein.

Other Precaution

1. This document may not be reprinted or reproduced, in whole or in part, without prior written consent of ROHM.

2. The Products may not be disassembled, converted, modified, reproduced or otherwise changed without prior written consent of ROHM.

3. In no event shall you use in any way whatsoever the Products and the related technical information contained in the Products or this document for any military purposes, including but not limited to, the development of mass-destruction weapons.

4. The proper names of companies or products described in this document are trademarks or registered trademarks of ROHM, its affiliated companies or third parties.

© 2015 ROHM Co., Ltd. All rights reserved.

General Precaution

1. Before you use our Products, you are requested to carefully read this document and fully understand its contents. ROHM shall not be in any way responsible or liable for failure, malfunction or accident arising from the use of any ROHM's Products against warning, caution or note contained in this document.

2. All information contained in this document is current as of the issuing date and subject to change without any prior notice. Before purchasing or using ROHM's Products, please confirm the latest information with a ROHM sales representative.

3. The information contained in this document is provided on an "as is" basis and ROHM does not warrant that all information contained in this document is accurate and/or error-free. ROHM shall not be in any way responsible or liable for any damages, expenses or losses incurred by you or third parties resulting from inaccuracy or errors of or concerning such information.

© 2015 ROHM Co., Ltd. All rights reserved.

Mouser Electronics

Authorized Distributor

Click to View Pricing, Inventory, Delivery & Lifecycle Information:

ROHM Semiconductor:

BD7281YG-CTR