BZX84C3V0L

Zener Diode

Data sheet

P_D	250	mW

● Outline

Package Code	SOT-23
JEITA Code	-
ROHM Code	SSD3

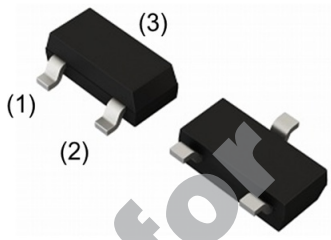

● Feature

High reliability

Small mold type

● Inner Circuit

(1)Anode
(2)N/C
(3)Cathode

● Application

Voltage regulation

● Packaging Specification

Packing	Embossed Tape
Reel Size(mm)	180
Taping Width(mm)	8
Basic Ordering Unit(pcs)	3000
Taping Code	T116
Marking	D3E

● Structure

Silicon Epitaxial Planar

● Absolute Maximum Rating (T_a = 25ºC)

Parameter	Symbol	Condition	Limits	Unit
Power dissipation	P_D	on Glass-epoxy substrate	250	mW
			2.0	mW/°C
Junction temperature	T_j	-	150	℃
Storage temperature	T_{stg}	-	-65 ~ 150	℃

Not Recommended for New Designs

© 2017 ROHM Co., Ltd. All rights reserved.

● Characteristic (T_a = 25ºC)

P/N	Symbol									
	Zener Voltage:VZ(V)			Reverse Current: IR(μA)		Dynamic Impedance:ZZ(Ω)		Temperature Coefficient:γ_Z(mV/°c)		
	MIN.	MAX.	I_Z(mA)	MAX.	V_R(V)	MAX.	I_Z(mA)	MIN.	MAX.	I_Z(mA)
BZX84C2V4L	2.20	2.60	5	50	1.0	100	5	-3.0	0.0	5
BZX84C2V7L	2.50	2.90	5	20	1.0	100	5	-3.0	0.0	5
BZX84C3V0L	2.80	3.20	5	10	1.0	95	5	-3.0	0.0	5
BZX84C3V3L	3.10	3.50	5	5	1.0	95	5	-3.0	0.0	5
BZX84C3V6L	3.40	3.80	5	5	1.0	90	5	-3.0	0.0	5
BZX84C3V9L	3.70	4.10	5	3	1.0	90	5	-3.0	0.0	5
BZX84C4V3L	4.00	4.60	5	3	1.0	90	5	-3.0	0.0	5
BZX84C4V7L	4.40	5.00	5	3	2.0	80	5	-2.5	1.1	5
BZX84C5V1L	4.80	5.40	5	2	2.0	60	5	-1.5	2.6	5
BZX84C5V6L	5.20	6.00	5	1	2.0	40	5	-1.0	3.1	5
BZX84C6V2L	5.80	6.60	5	3	4.0	10	5	0.9	3.8	5
BZX84C6V8L	6.40	7.20	5	2	4.0	15	5	1.5	4.5	5
BZX84C7V5L	7.00	7.90	5	1	5.0	15	5	2.2	5.0	5
BZX84C8V2L	7.70	8.70	5	0.7	5.0	15	5	3.2	6.1	5
BZX84C9V1L	8.50	9.60	5	0.5	6.0	15	5	3.9	6.9	5
BZX84C10VL	9.40	10.60	5	0.2	7.0	20	5	5.0	8.0	5
BZX84C11VL	10.40	11.60	5	0.1	8.0	20	5	5.8	8.8	5
BZX84C12VL	11.40	12.70	5	0.1	8.0	25	5	6.8	9.8	5
BZX84C13VL	12.40	14.10	5	0.1	8.0	30	5	7.9	11.0	5
BZX84C15VL	13.80	15.60	5	0.1	10.0	30	5	9.4	12.6	5
BZX84C16VL	15.30	17.10	5	0.1	11.0	40	5	11.0	14.3	5
BZX84C18VL	16.80	19.10	5	0.1	13.0	45	5	12.6	15.8	5
BZX84C20VL	18.80	21.20	5	0.1	14.0	55	5	14.3	17.3	5
BZX84C22VL	20.80	23.30	5	0.1	15.0	55	5	15.8	19.3	5
BZX84C24VL	22.80	25.60	5	0.1	17.0	70	5	17.3	22.6	5
BZX84C27VL	25.10	28.90	2	0.1	19.0	80	2	19.3	25.8	2
BZX84C30VL	28.00	32.00	2	0.1	21.0	80	2	22.6	28.5	2
BZX84C33VL	31.00	35.00	2	0.1	23.0	80	2	25.8	31.1	2
BZX84C36VL	34.00	38.00	2	0.1	25.0	90	2	28.5	34.0	2

V_Z test time is 40ms

Not Recommended for New Designs

● Marking

P/N	Marking	P/N	Marking
BZX84C2V4L	D3C	BZX84C10VL	D3T
BZX84C2V7L	D3D	BZX84C11VL	D3U
BZX84C3V0L	D3E	BZX84C12VL	D3V
BZX84C3V3L	D3F	BZX84C13VL	D3W
BZX84C3V6L	D3G	BZX84C15VL	D3X
BZX84C3V9L	D3H	BZX84C16VL	D3Y
BZX84C4V3L	D3J	BZX84C18VL	D3Z
BZX84C4V7L	D3K	BZX84C20VL	D5A
BZX84C5V1L	D3L	BZX84C22VL	D5B
BZX84C5V6L	D3M	BZX84C24VL	D5C
BZX84C6V2L	D3N	BZX84C27VL	D5D
BZX84C6V8L	D3P	BZX84C30VL	D5E
BZX84C7V5L	D3Q	BZX84C33VL	D5F
BZX84C8V2L	D3R	BZX84C36VL	D5G
BZX84C9V1L	D3S		

© 2017 ROHM Co., Ltd. All rights reserved.

● Characteristic Curves

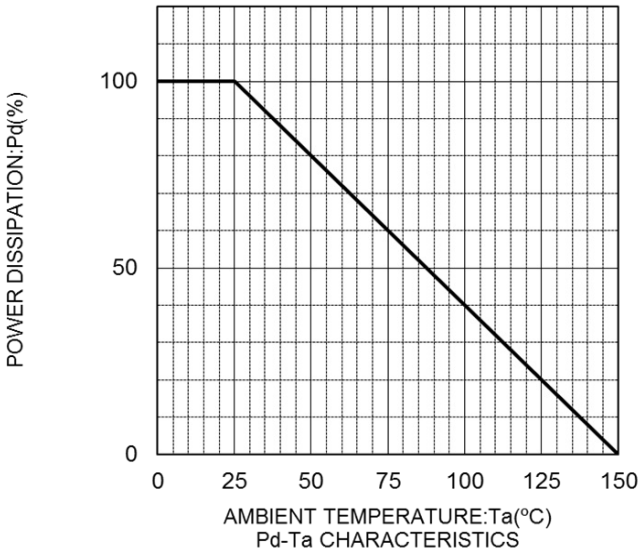

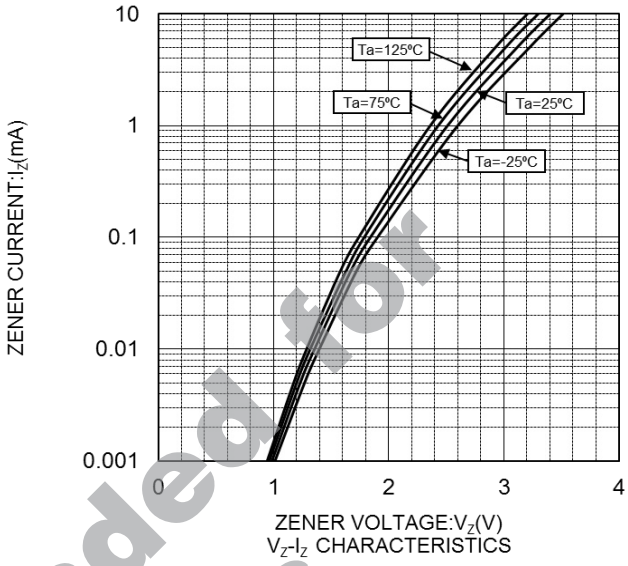

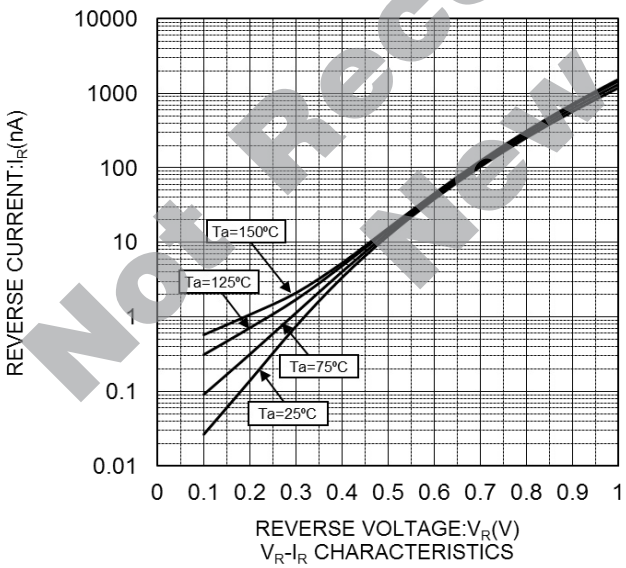

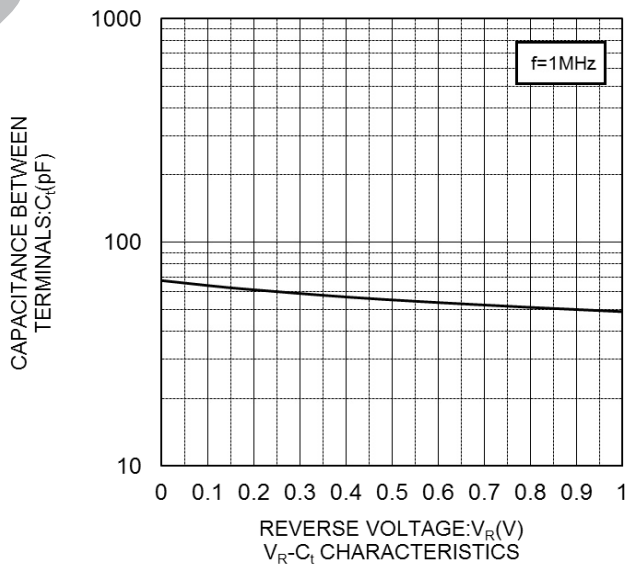

Not Recommended for New Designs

© 2017 ROHM Co., Ltd. All rights reserved.

● Characteristic Curves

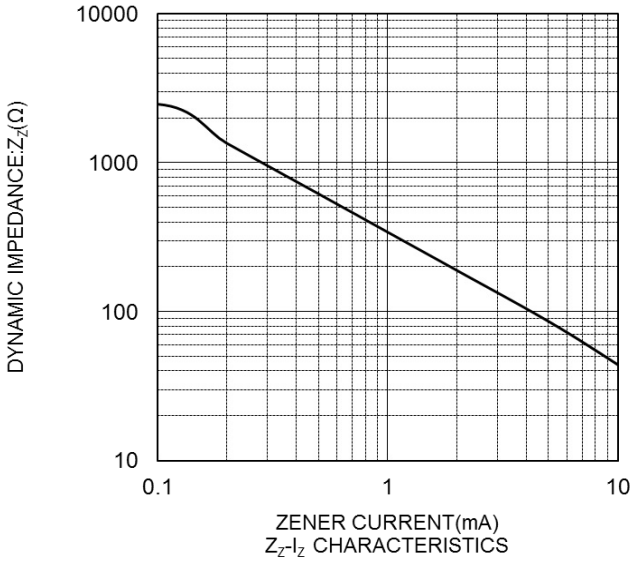

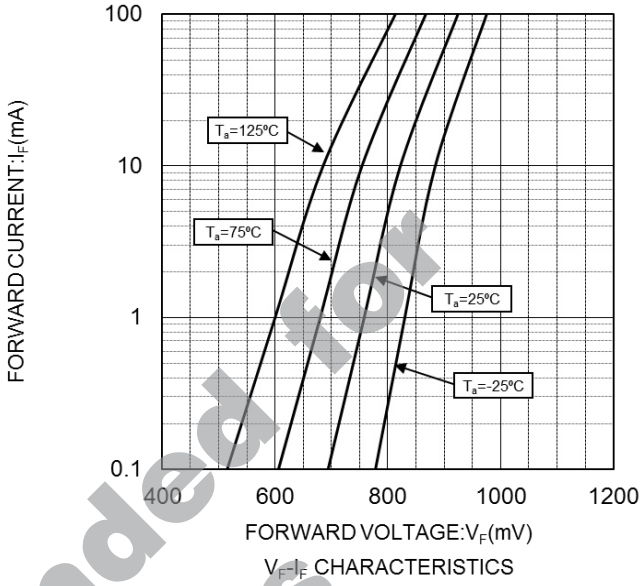

Not Recommended for New Designs

© 2017 ROHM Co., Ltd. All rights reserved.

● Dimension (SSD3 SOT-23)

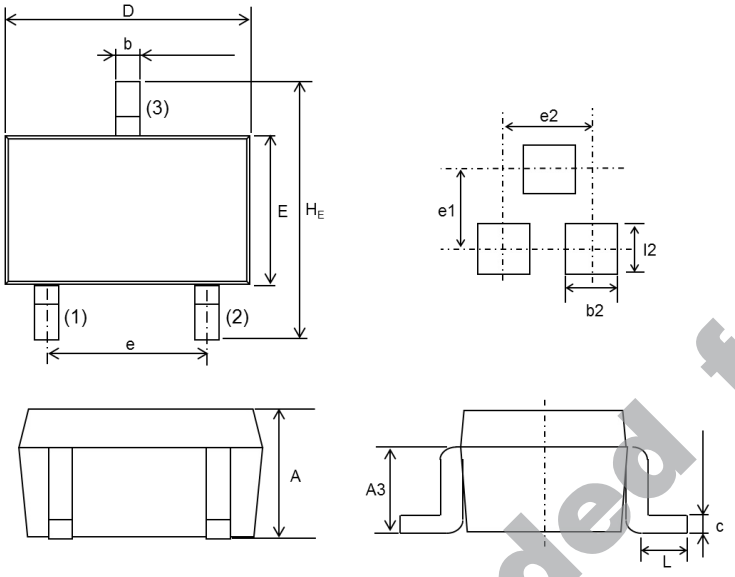

DIM	Milimeters			Inches		
	Min.	Average	Max.	Min.	Average	Max.
A	0.85	0.95	1.15	0.033	0.037	0.045
A3	0.35	0.45	0.55	0.014	0.018	0.022
b	0.35	0.40	0.50	0.014	0.016	0.020
c	0.09	0.15	0.25	0.004	0.006	0.010
D	2.70	2.90	3.10	0.106	0.114	0.122
E	1.20	1.30	1.50	0.047	0.051	0.059
H_E	2.20	2.40	2.60	0.087	0.094	0.102
L	0.20	-	-	0.008	-	-
e	1.70	1.90	2.10	0.067	0.075	0.083
l2	1.00	-	-	0.039	-	-
b2	0.80	-	-	0.031	-	-
e1	-	2.10	-	-	0.083	-
e2	-	1.90	-	-	0.075	-

● Taping (Unit:mm)

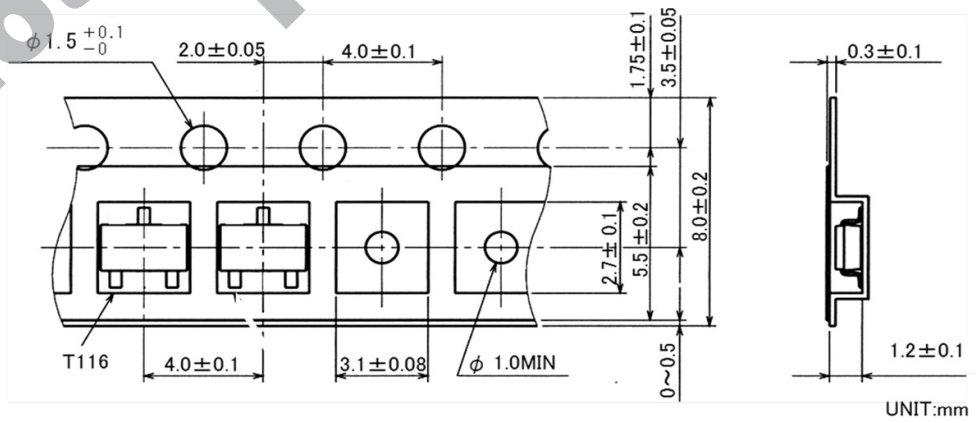

Not Recommended for New Designs

© 2017 ROHM Co., Ltd. All rights reserved.

Notice

Precaution on using ROHM Products

1. Our Products are designed and manufactured for application in ordinary electronic equipment (such as AV equipment, OA equipment, telecommunication equipment, home electronic appliances, amusement equipment, etc.). If you intend to use our Products in devices requiring extremely high reliability (such as medical equipment (Note 1), transport equipment, traffic equipment, aircraft/spacecraft, nuclear power controllers, fuel controllers, car equipment including car accessories, safety devices, etc.) and whose malfunction or failure may cause loss of human life, bodily injury or serious damage to property ("Specific Applications"), please consult with the ROHM sales representative in advance. Unless otherwise agreed in writing by ROHM in advance, ROHM shall not be in any way responsible or liable for any damages, expenses or losses incurred by you or third parties arising from the use of any ROHM's Products for Specific Applications.

(Note1) Medical Equipment Classification of the Specific Applications

JAPAN	USA	EU	CHINA
CLASSⅢ	CLASSⅢ	CLASSⅡb	CLASSⅢ
CLASSⅣ		CLASSⅢ	

2. ROHM designs and manufactures its Products subject to strict quality control system. However, semiconductor products can fail or malfunction at a certain rate. Please be sure to implement, at your own responsibilities, adequate safety measures including but not limited to fail-safe design against the physical injury, damage to any property, which a failure or malfunction of our Products may cause. The following are examples of safety measures:
   [a] Installation of protection circuits or other protective devices to improve system safety
   [b] Installation of redundant circuits to reduce the impact of single or multiple circuit failure

3. Our Products are designed and manufactured for use under standard conditions and not under any special or extraordinary environments or conditions, as exemplified below. Accordingly, ROHM shall not be in any way responsible or liable for any damages, expenses or losses arising from the use of any ROHM's Products under any special or extraordinary environments or conditions. If you intend to use our Products under any special or extraordinary environments or conditions (as exemplified below), your independent verification and confirmation of product performance, reliability, etc, prior to use, must be necessary:
   [a] Use of our Products in any types of liquid, including water, oils, chemicals, and organic solvents
   [b] Use of our Products outdoors or in places where the Products are exposed to direct sunlight or dust
   [c] Use of our Products in places where the Products are exposed to sea wind or corrosive gases, including Cl_2, H_2S, NH_3, SO_2, and NO_2
   [d] Use of our Products in places where the Products are exposed to static electricity or electromagnetic waves
   [e] Use of our Products in proximity to heat-producing components, plastic cords, or other flammable items
   [f] Sealing or coating our Products with resin or other coating materials
   [g] Use of our Products without cleaning residue of flux (Exclude cases where no-clean type fluxes is used. However, recommend sufficiently about the residue.) ; or Washing our Products by using water or water-soluble cleaning agents for cleaning residue after soldering
   [h] Use of the Products in places subject to dew condensation

4. The Products are not subject to radiation-proof design.

5. Please verify and confirm characteristics of the final or mounted products in using the Products.

6. In particular, if a transient load (a large amount of load applied in a short period of time, such as pulse, is applied, confirmation of performance characteristics after on-board mounting is strongly recommended. Avoid applying power exceeding normal rated power; exceeding the power rating under steady-state loading condition may negatively affect product performance and reliability.

7. De-rate Power Dissipation depending on ambient temperature. When used in sealed area, confirm that it is the use in the range that does not exceed the maximum junction temperature.

8. Confirm that operation temperature is within the specified range described in the product specification.

9. ROHM shall not be in any way responsible or liable for failure induced under deviant condition from what is defined in this document.

Precaution for Mounting / Circuit board design

1. When a highly active halogenous (chlorine, bromine, etc.) flux is used, the residue of flux may negatively affect product performance and reliability.

2. In principle, the reflow soldering method must be used on a surface-mount products, the flow soldering method must be used on a through hole mount products. If the flow soldering method is preferred on a surface-mount products, please consult with the ROHM representative in advance.

For details, please refer to ROHM Mounting specification

Not Recommended for New Designs

© 2015 ROHM Co., Ltd. All rights reserved.

Precautions Regarding Application Examples and External Circuits

1. If change is made to the constant of an external circuit, please allow a sufficient margin considering variations of the characteristics of the Products and external components, including transient characteristics, as well as static characteristics.

2. You agree that application notes, reference designs, and associated data and information contained in this document are presented only as guidance for Products use. Therefore, in case you use such information, you are solely responsible for it and you must exercise your own independent verification and judgment in the use of such information contained in this document. ROHM shall not be in any way responsible or liable for any damages, expenses or losses incurred by you or third parties arising from the use of such information.

Precaution for Electrostatic

This Product is electrostatic sensitive product, which may be damaged due to electrostatic discharge. Please take proper caution in your manufacturing process and storage so that voltage exceeding the Products maximum rating will not be applied to Products. Please take special care under dry condition (e.g. Grounding of human body / equipment / solder iron, isolation from charged objects, setting of Ionizer, friction prevention and temperature / humidity control).

Precaution for Storage / Transportation

1. Product performance and soldered connections may deteriorate if the Products are stored in the places where:
   [a] the Products are exposed to sea winds or corrosive gases, including Cl_2, H_2S, NH_3, SO_2, and NO_2
   [b] the temperature or humidity exceeds those recommended by ROHM
   [c] the Products are exposed to direct sunshine or condensation
   [d] the Products are exposed to high Electrostatic

2. Even under ROHM recommended storage condition, solderability of products out of recommended storage time period may be degraded. It is strongly recommended to confirm solderability before using Products of which storage time is exceeding the recommended storage time period.

3. Store / transport cartons in the correct direction, which is indicated on a carton with a symbol. Otherwise bent leads may occur due to excessive stress applied when dropping of a carton.

4. Use Products within the specified time after opening a humidity barrier bag. Baking is required before using Products of which storage time is exceeding the recommended storage time period.

Precaution for Product Label

A two-dimensional barcode printed on ROHM Products label is for ROHM's internal use only.

Precaution for Disposition

When disposing Products please dispose them properly using an authorized industry waste company.

Precaution for Foreign Exchange and Foreign Trade act

Since concerned goods might be fallen under listed items of export control prescribed by Foreign exchange and Foreign trade act, please consult with ROHM in case of export.

Precaution Regarding Intellectual Property Rights

1. All information and data including but not limited to application example contained in this document is for reference only. ROHM does not warrant that foregoing information or data will not infringe any intellectual property rights or any other rights of any third party regarding such information or data.

2. ROHM shall not have any obligations where the claims, actions or demands arising from the combination of the Products with other articles such as components, circuits, systems or external equipment (including software).

3. No license, expressly or implied, is granted hereby under any intellectual property rights or other rights of ROHM or any third parties with respect to the Products or the information contained in this document. Provided, however, that ROHM will not assert its intellectual property rights or other rights against you or your customers to the extent necessary to manufacture or sell products containing the Products, subject to the terms and conditions herein.

Other Precaution

1. This document may not be reprinted or reproduced, in whole or in part, without prior written consent of ROHM.

2. The Products may not be disassembled, converted, modified, reproduced or otherwise changed without prior written consent of ROHM.

3. In no event shall you use in any way whatsoever the Products and the related technical information contained in the Products or this document for any military purposes, including but not limited to, the development of mass-destruction weapons.

4. The proper names of companies or products described in this document are trademarks or registered trademarks of ROHM, its affiliated companies or third parties.

Not Recommended for New Designs

© 2015 ROHM Co., Ltd. All rights reserved.

General Precaution

1. Before you use our Products, you are requested to carefully read this document and fully understand its contents. ROHM shall not be in any way responsible or liable for failure, malfunction or accident arising from the use of any ROHM's Products against warning, caution or note contained in this document.

2. All information contained in this document is current as of the issuing date and subject to change without any prior notice. Before purchasing or using ROHM's Products, please confirm the latest information with a ROHM sales representative.

3. The information contained in this document is provided on an "as is" basis and ROHM does not warrant that all information contained in this document is accurate and/or error-free. ROHM shall not be in any way responsible or liable for any damages, expenses or losses incurred by you or third parties resulting from inaccuracy or errors of or concerning such information.

Not Recommended for New Designs

© 2015 ROHM Co., Ltd. All rights reserved.

Mouser Electronics

Authorized Distributor

Click to View Pricing, Inventory, Delivery & Lifecycle Information:

ROHM Semiconductor:

BZX84C3V0LT116