UT6MA3

20V Nch+Pch Middle Power MOSFET

Datasheet

Symbol	Tr1:Nch	Tr2:Pch
V_{DSS}	20V	-20V
$R_{DS(on)}$(Max.)	42mΩ	59mΩ
I_D	±5.5A	±5.0A
P_D	2.0W	

●Outline

DFN2020-8D

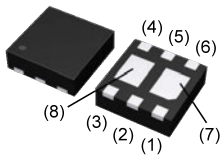

HUML2020L8

●Features

1) Low on - resistance.
2) Small Surface Mount Package.
3) Pb-free lead plating ; RoHS compliant.
4) Halogen Free.

●Inner circuit

(1) Tr1 Source
(2) Tr1 Gate
(3) Tr2 Drain
(4) Tr2 Source
(5) Tr2 Gate
(6) Tr1 Drain
(7) Tr1 Drain
(8) Tr2 Drain

*1 Body Diode

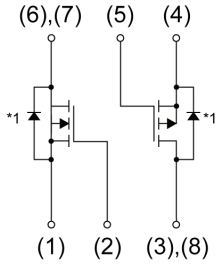

●Packaging specifications

Type	Packing	Embossed Tape
	Reel size (mm)	180
	Tape width (mm)	8
	Basic ordering unit (pcs)	3000
	Taping code	TCR
	Marking	MA3

●Application

Switching

●Absolute maximum ratings (T_a = 25°C ,unless otherwise specified)

Parameter		Symbol	Value		Unit
			Tr1:Nch	Tr2:Pch	
Drain - Source voltage		V_{DSS}	20	-20	V
Continuous drain current		I_D	±5.5	±5.0	A
Pulsed drain current		I_{DP} *1	±12	±12	A
Gate - Source voltage		V_{GSS}	±8	±8	V
Avalanche current, single pulse		I_{AS} *2	1.8	-2.3	A
Avalanche energy, single pulse		E_{AS} *2	2.0	4.0	mJ
Power dissipation	total	P_D *3	2.0		W
	element		1.4		
Junction temperature		T_j	150		℃
Operating junction and storage temperature range		T_{stg}	-55 to +150		℃

© 2015 ROHM Co., Ltd. All rights reserved.

●Thermal resistance

Parameter	Symbol	Values			Unit
		Min.	Typ.	Max.	
Thermal resistance, junction - ambient	R_{thJA} *3	-	-	62.5	℃/W

●Electrical characteristics (T_a = 25°C)

Parameter	Symbol	Type	Conditions	Values			Unit
				Min.	Typ.	Max.	
Drain - Source breakdown voltage	$V_{(BR)DSS}$	Tr1	V_{GS} = 0V, I_D = 1mA	20	-	-	V
		Tr2	V_{GS} = 0V, I_D = -1mA	-20	-	-	
Breakdown voltage temperature coefficient	$\frac{\Delta V_{(BR)DSS}}{\Delta T_j}$	Tr1	I_D = 1mA, referenced to 25℃	-	18	-	mV/℃
		Tr2	I_D = -1mA, referenced to 25℃	-	-10.3	-	
Zero gate voltage drain current	I_{DSS}	Tr1	V_{DS} = 20V, V_{GS} = 0V	-	-	1	μA
		Tr2	V_{DS} = -20V, V_{GS} = 0V	-	-	-1	
Gate - Source leakage current	I_{GSS}	Tr1	V_{DS} = 0V, V_{GS} = ±8V	-	-	±100	nA
		Tr2	V_{DS} = 0V, V_{GS} = ±8V	-	-	±100	
Gate threshold voltage	$V_{GS(th)}$	Tr1	V_{DS} = V_{GS}, I_D = 1mA	0.5	-	1.5	V
		Tr2	V_{DS} = V_{GS}, I_D = -1mA	-0.5	-	-1.5	
Gate threshold voltage temperature coefficient	$\frac{\Delta V_{GS(th)}}{\Delta T_j}$	Tr1	I_D = 1mA, referenced to 25℃	-	-1.8	-	mV/℃
		Tr2	I_D = -1mA, referenced to 25℃	-	1.7	-	
Static drain - source on - state resistance	$R_{DS(on)}$ *4	Tr1	V_{GS} = 4.5V, I_D = 5.5A	-	30	42	mΩ
			V_{GS} = 2.5V, I_D = 2.75A	-	45	63	
		Tr2	V_{GS} = -4.5V, I_D = -5A	-	42	59	
			V_{GS} = -2.5V, I_D = -2.5A	-	54	76	
Gate resistance	R_G	Tr1	f=1MHz, open drain	-	2.2	-	Ω
		Tr2		-	9.5	-	
Forward Transfer Admittance	$\|Y_{fs}\|$ *4	Tr1	V_{DS} = 5V, I_D = 3A	3.1	-	-	S
		Tr2	V_{DS} = -5V, I_D = -3A	4.1	-	-	

*1 Pw ≦ 10μs, Duty cycle ≦ 1%

*2 Tr1: L ≃ 1mH, V_{DD} = 10V, R_G = 25Ω, STARTING T_j = 25℃ Fig.3-1,3-2

Tr2: L ≃ 1mH, V_{DD} = -10V, R_G = 25Ω, STARTING T_j = 25℃ Fig.6-1,6-2

*3 Mounted on a Cu board (40×40×0.8mm)

*4 Pulsed

© 2015 ROHM Co., Ltd. All rights reserved.

●Electrical characteristics (T_a = 25°C)

<Tr1>

Parameter	Symbol	Conditions	Values			Unit
			Min.	Typ.	Max.	
Input capacitance	C_{iss}	V_{GS} = 0V	-	462	-	pF
Output capacitance	C_{oss}	V_{DS} = 10V	-	56	-	
Reverse transfer capacitance	C_{rss}	f = 1MHz	-	37	-	
Turn - on delay time	$t_{d(on)}$ *4	V_{DD} ≃ 10V, V_{GS} = 4.5V	-	7.8	-	ns
Rise time	t_r *4	I_D = 2.75A	-	5.9	-	
Turn - off delay time	$t_{d(off)}$ *4	R_L = 3.64Ω	-	24	-	
Fall time	t_f *4	R_G = 10Ω	-	5.5	-	

<Tr2>

Parameter	Symbol	Conditions	Values			Unit
			Min.	Typ.	Max.	
Input capacitance	C_{iss}	V_{GS} = 0V	-	460	-	pF
Output capacitance	C_{oss}	V_{DS} = -10V	-	90	-	
Reverse transfer capacitance	C_{rss}	f = 1MHz	-	80	-	
Turn - on delay time	$t_{d(on)}$ *4	V_{DD} ≃ -10V, V_{GS} = -4.5V	-	9	-	ns
Rise time	t_r *4	I_D = -2.5A	-	36	-	
Turn - off delay time	$t_{d(off)}$ *4	R_L = 4Ω	-	50	-	
Fall time	t_f *4	R_G = 10Ω	-	30	-	

© 2015 ROHM Co., Ltd. All rights reserved.

●Gate charge characteristics (T_a = 25°C)

<Tr1>

Parameter	Symbol	Conditions	Values			Unit
			Min.	Typ.	Max.	
Total gate charge	Q_g *4	V_{DD} ≃ 10V, I_D = 5.5A V_{GS} = 4.5V	-	4.0	-	nC
Gate - Source charge	Q_{gs} *4		-	1.0	-	
Gate - Drain charge	Q_{gd} *4		-	1.0	-	

<Tr2>

Parameter	Symbol	Conditions	Values			Unit
			Min.	Typ.	Max.	
Total gate charge	Q_g *4	V_{DD} ≃ -10V, I_D = -5A V_{GS} = -4.5V	-	6.5	-	nC
Gate - Source charge	Q_{gs} *4		-	0.9	-	
Gate - Drain charge	Q_{gd} *4		-	2.2	-	

●Body diode electrical characteristics (Source-Drain) (T_a = 25°C)

<Tr1>

Parameter	Symbol	Conditions	Values			Unit
			Min.	Typ.	Max.	
Continuous forward current	I_S	T_a = 25℃	-	-	1.67	A
Pulse forward current	I_{SP} *1		-	-	12	
Forward voltage	V_{SD} *4	V_{GS} = 0V, I_S = 1.67A	-	-	1.2	V

<Tr2>

Parameter	Symbol	Conditions	Values			Unit
			Min.	Typ.	Max.	
Continuous forward current	I_S	T_a = 25℃	-	-	-1.67	A
Pulse forward current	I_{SP} *1		-	-	-12	
Forward voltage	V_{SD} *4	V_{GS} = 0V, I_S = -1.67A	-	-	-1.2	V

© 2015 ROHM Co., Ltd. All rights reserved.

●Electrical characteristic curves <Tr1>

Fig.1 Power Dissipation Derating Curve

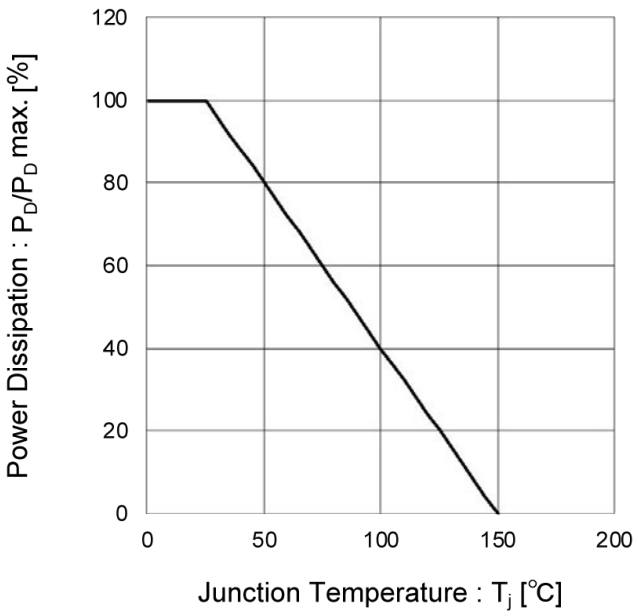

Fig.2 Maximum Safe Operating Area

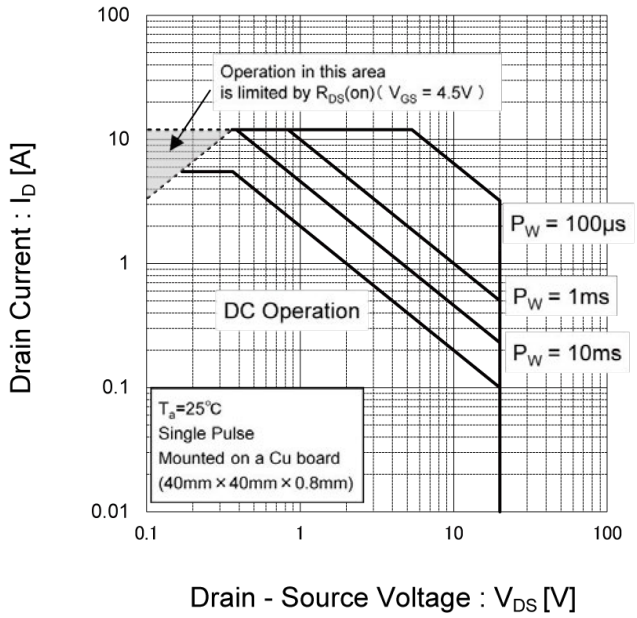

Fig.3 Normalized Transient Thermal Resistance vs. Pulse Width

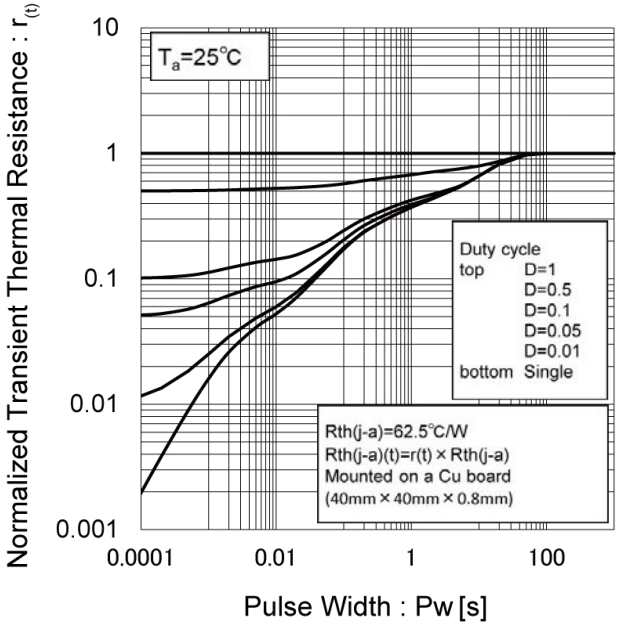

Fig.4 Single Pulse Maximum Power dissipation

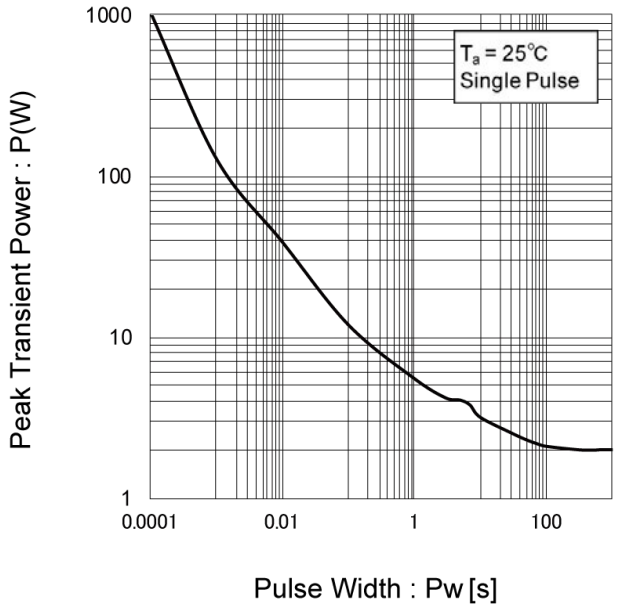

© 2015 ROHM Co., Ltd. All rights reserved.

●Electrical characteristic curves <Tr1>

Fig.5 Typical Output Characteristics(I)

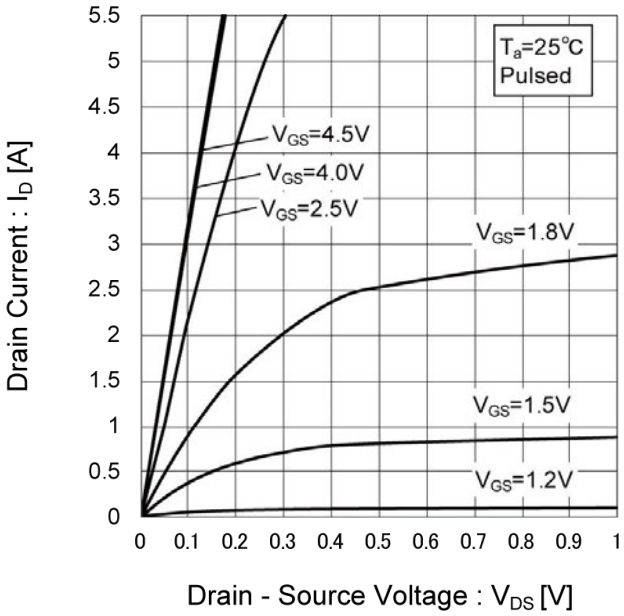

Fig.6 Typical Output Characteristics(II)

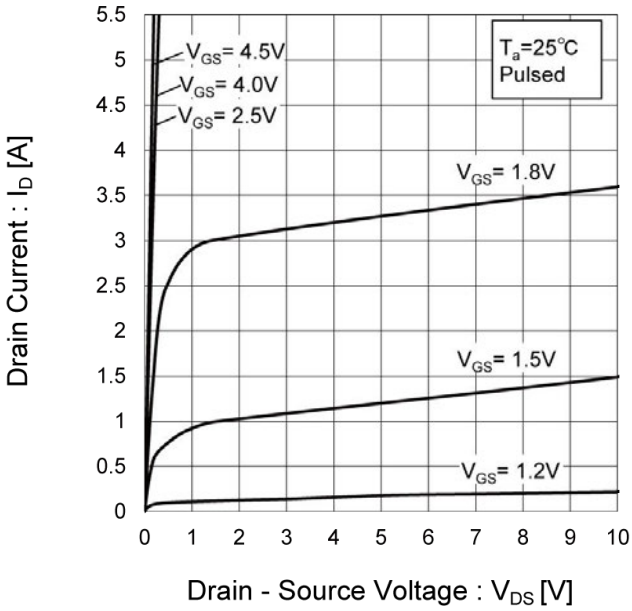

Fig.7 Breakdown Voltage vs. Junction Temperature

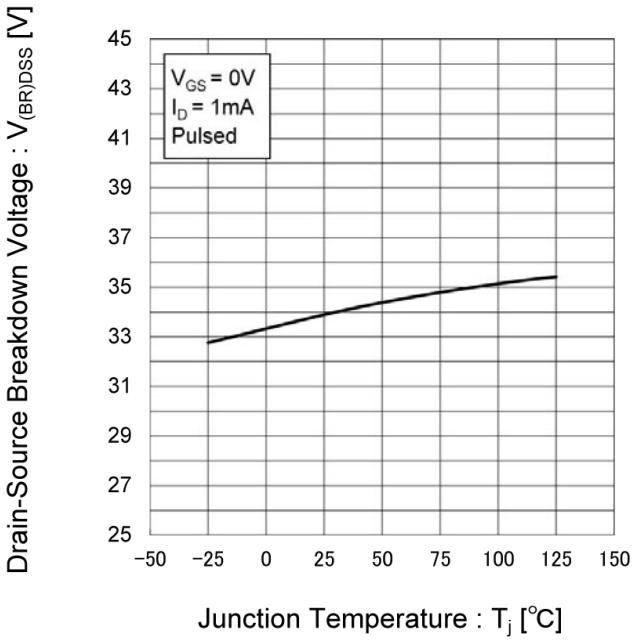

© 2015 ROHM Co., Ltd. All rights reserved.

●Electrical characteristic curves <Tr1>

Fig.8 Typical Transfer Characteristics

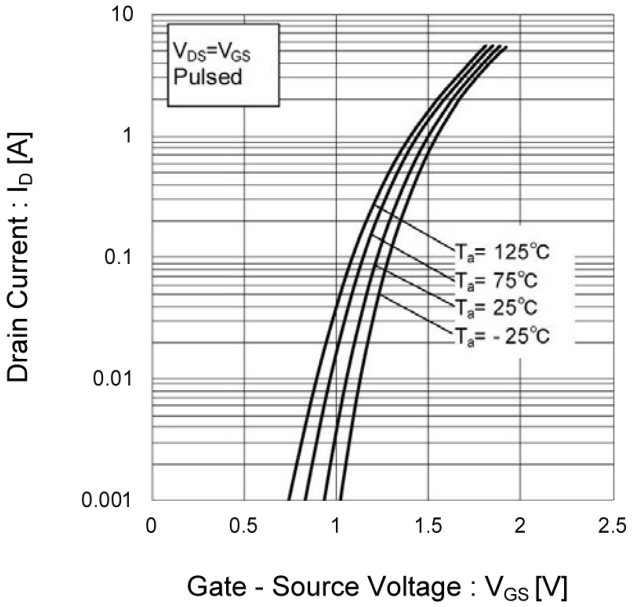

Fig.9 Gate Threshold Voltage vs. Junction Temperature

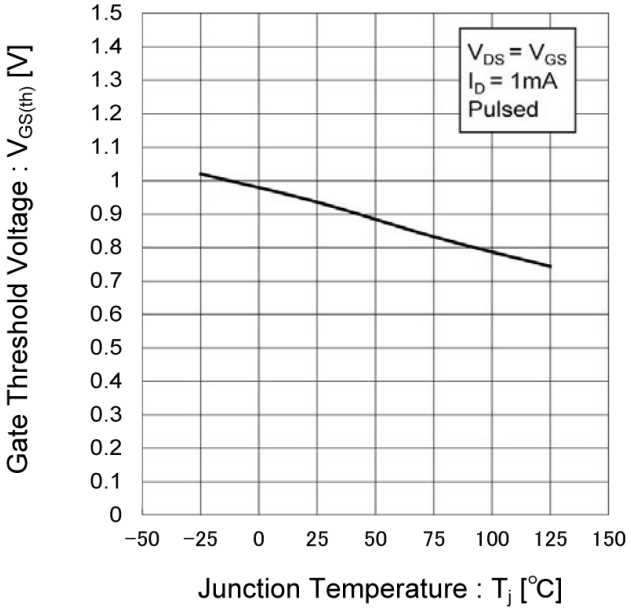

Fig.10 Forward Transfer Admittance vs. Drain Current

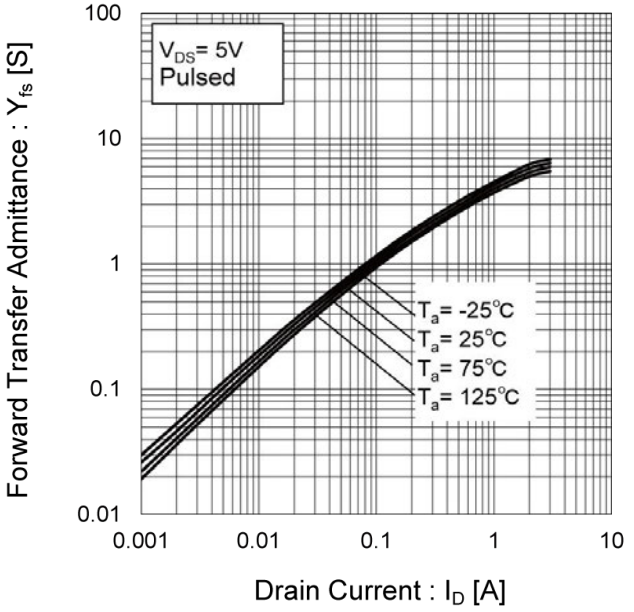

© 2015 ROHM Co., Ltd. All rights reserved.

●Electrical characteristic curves <Tr1>

Fig.11 Drain Current Derating Curve

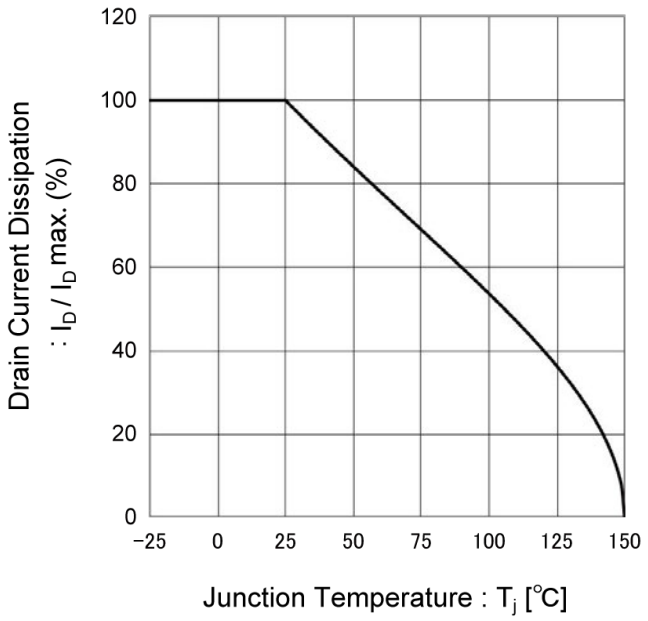

Fig.12 Static Drain - Source On - State Resistance vs. Gate Source Voltage

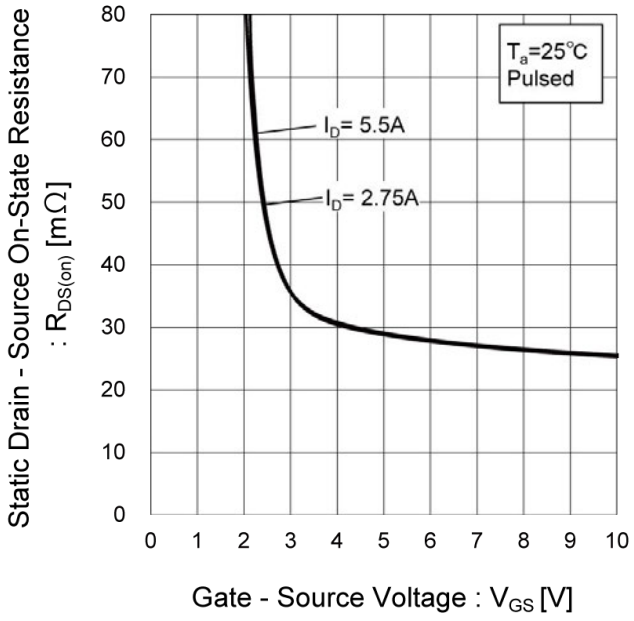

Fig.13 Static Drain - Source On - State Resistance vs. Junction Temperature

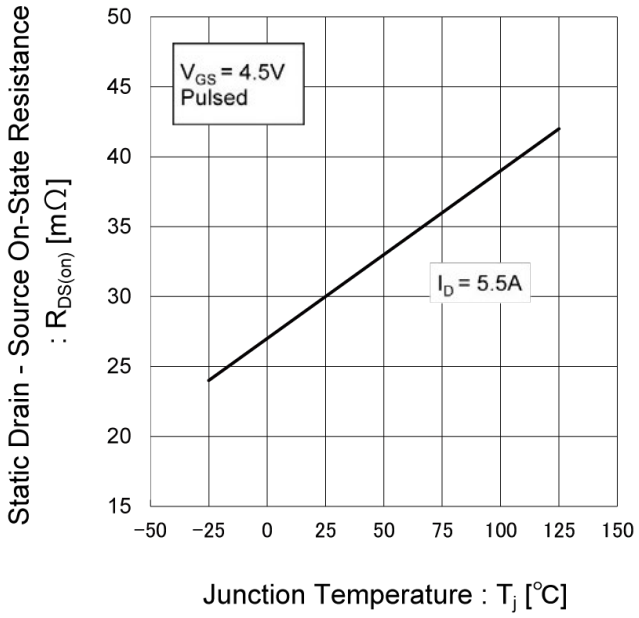

© 2015 ROHM Co., Ltd. All rights reserved.

●Electrical characteristic curves <Tr1>

Fig.14 Static Drain - Source On - State Resistance vs. Drain Current(I)

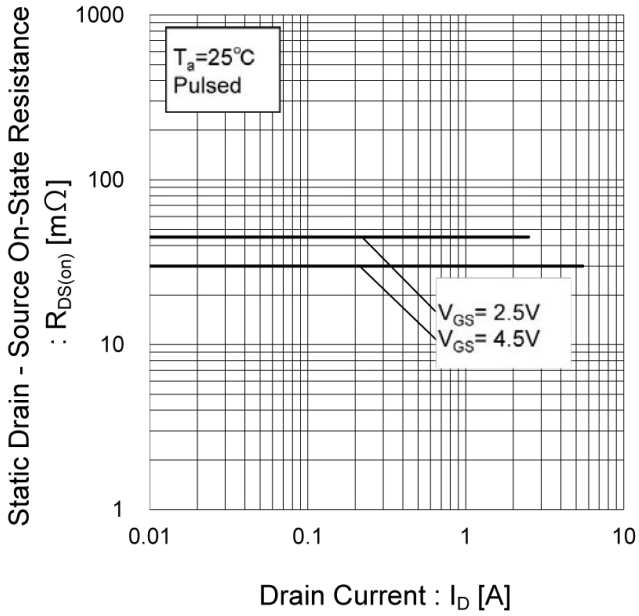

Fig.15 Static Drain - Source On - State Resistance vs. Drain Current(II)

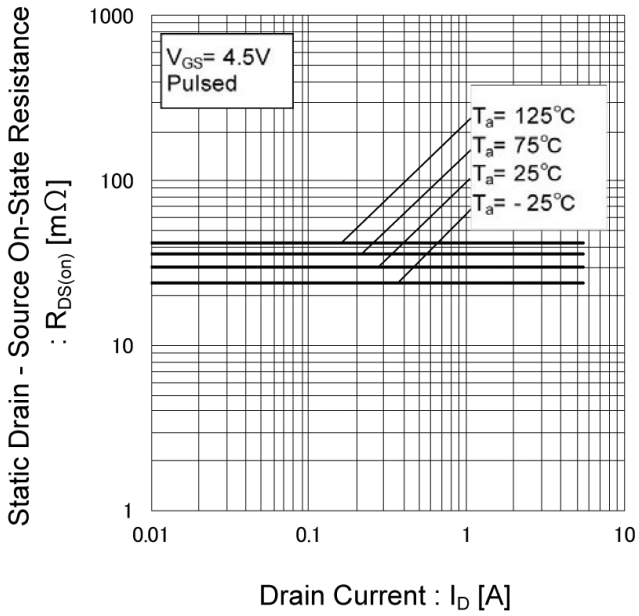

Fig.16 Static Drain - Source On - State Resistance vs. Drain Current(III)

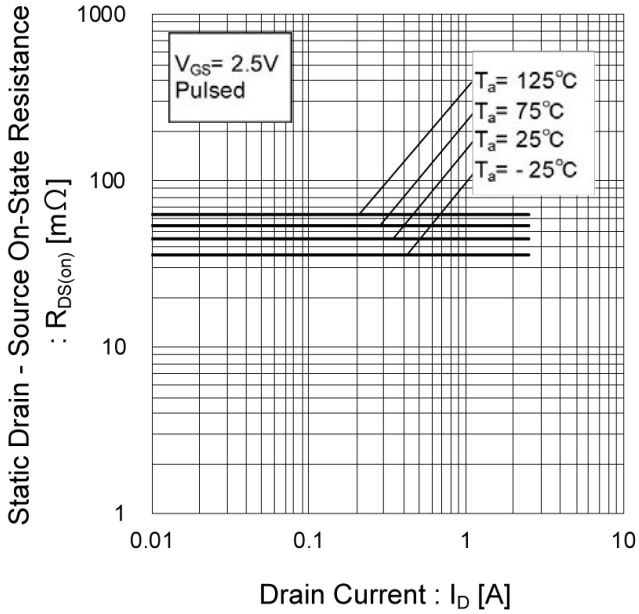

© 2015 ROHM Co., Ltd. All rights reserved.

●Electrical characteristic curves <Tr1>

Fig.17 Typical Capacitance vs. Drain - Source Voltage

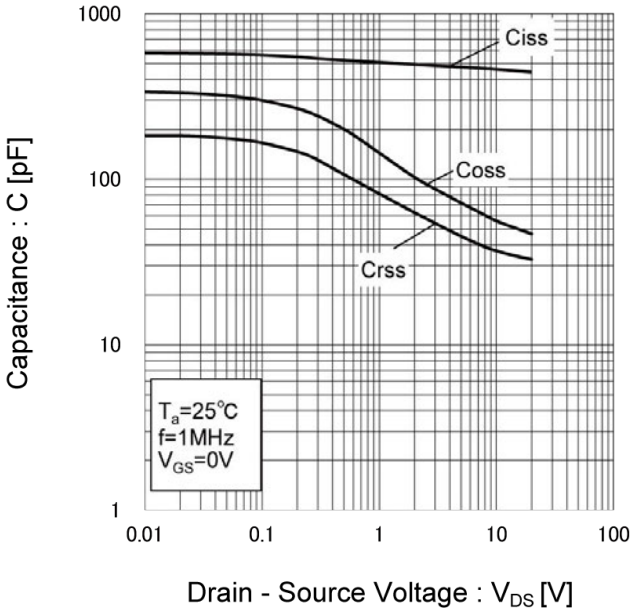

Fig.18 Switching Characteristics

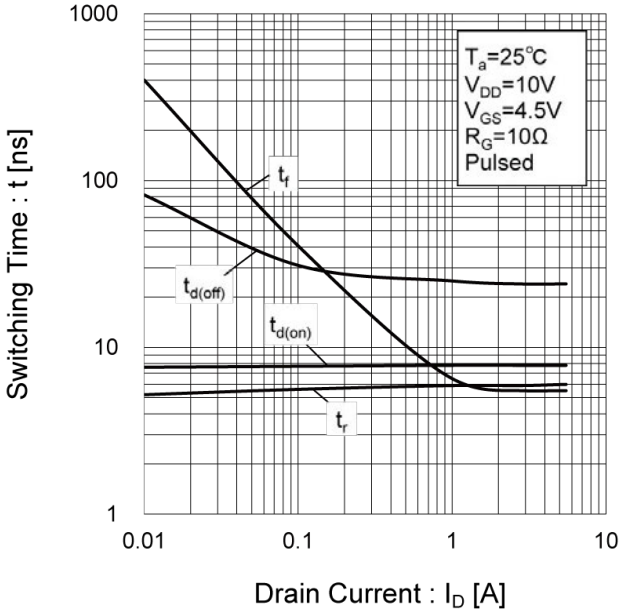

Fig.19 Dynamic Input Characteristics

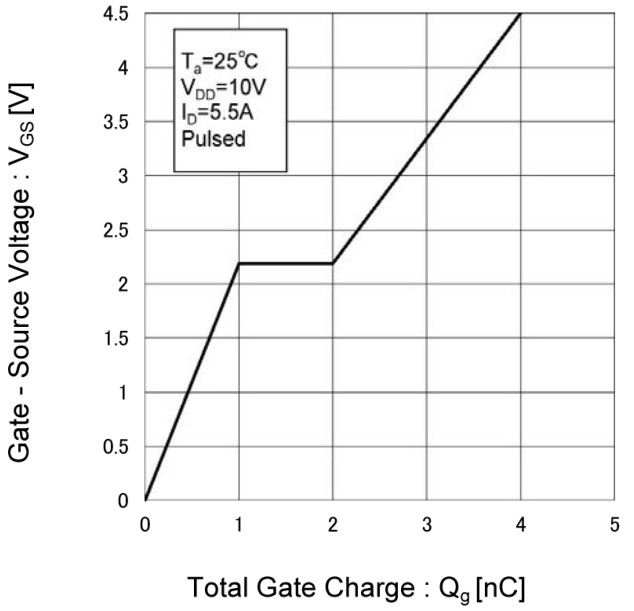

Fig.20 Source Current vs. Source Drain Voltage

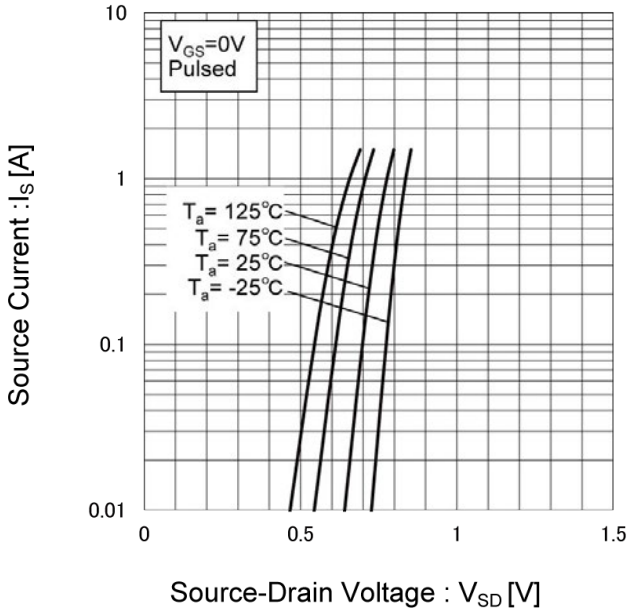

© 2015 ROHM Co., Ltd. All rights reserved.

●Electrical characteristic curves <Tr2>

Fig.1 Power Dissipation Derating Curve

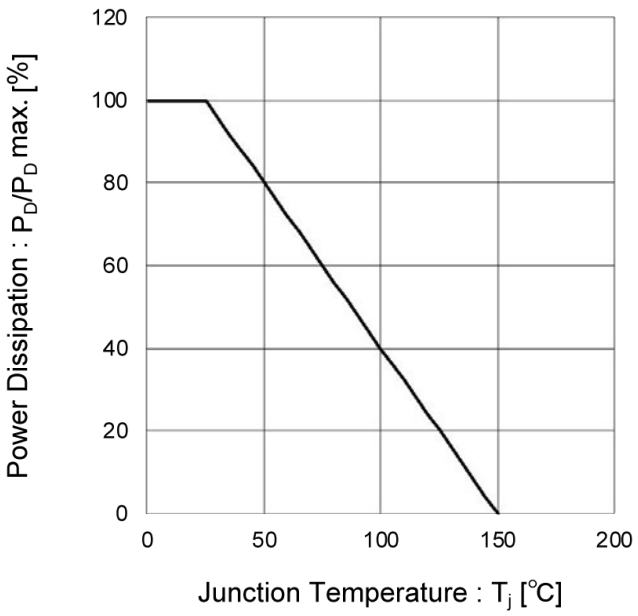

Fig.2 Maximum Safe Operating Area

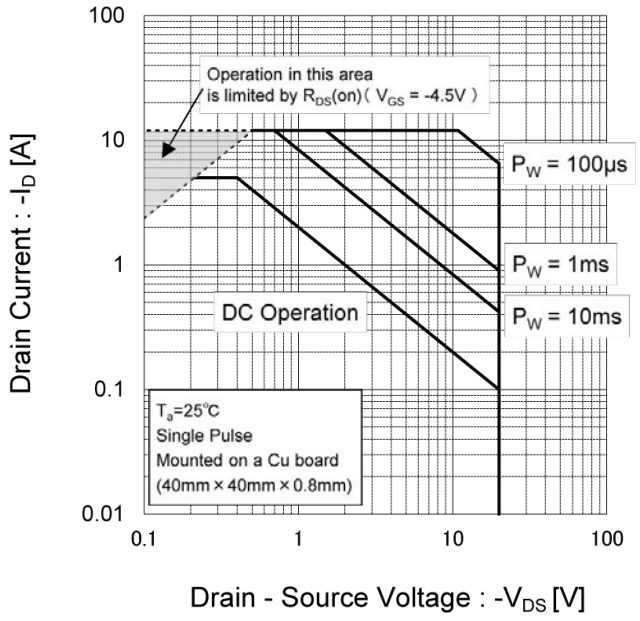

Fig.3 Normalized Transient Thermal Resistance vs. Pulse Width

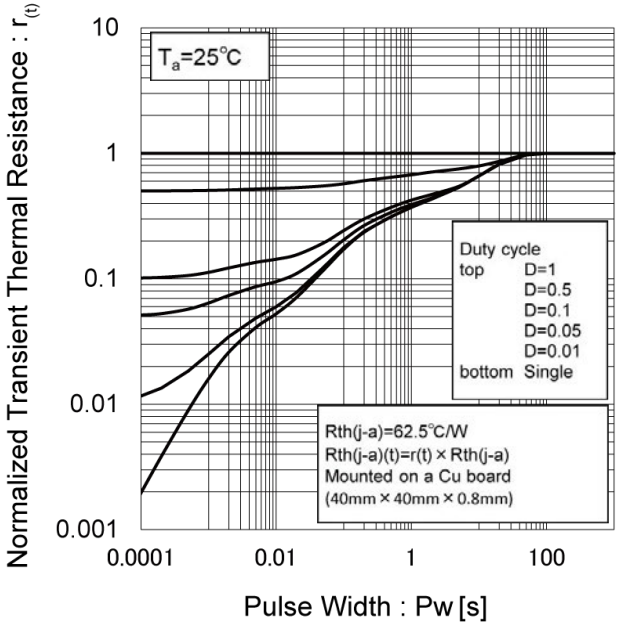

Fig.4 Single Pulse Maximum Power dissipation

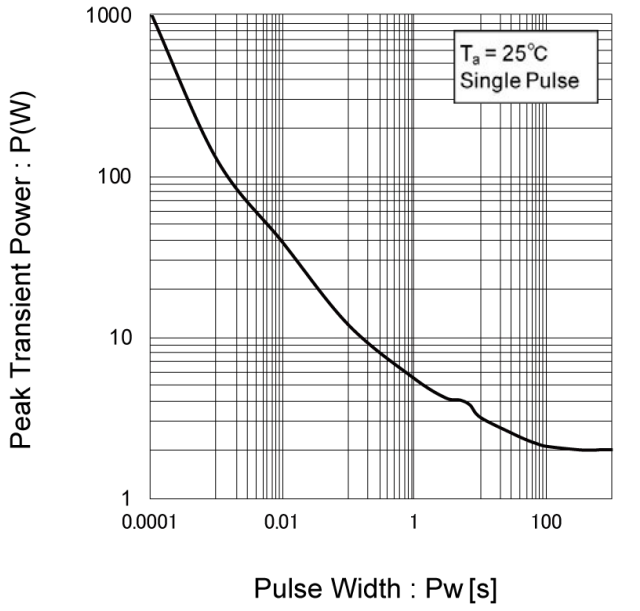

© 2015 ROHM Co., Ltd. All rights reserved.

●Electrical characteristic curves <Tr2>

Fig.5 Typical Output Characteristics(I)

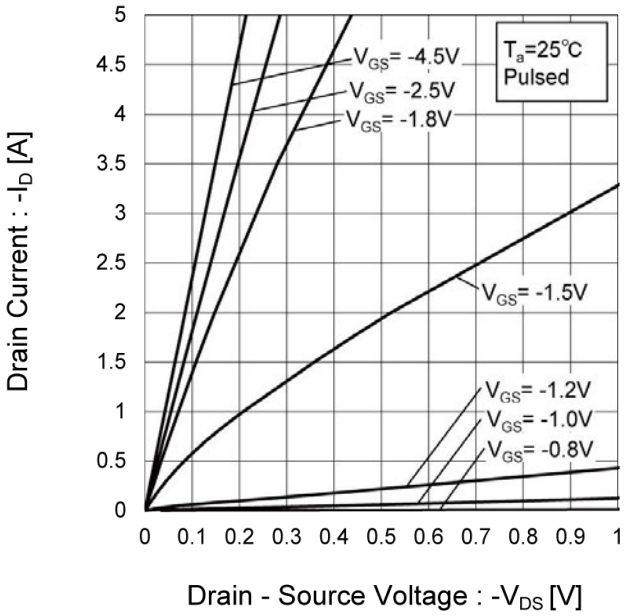

Fig.6 Typical Output Characteristics(II)

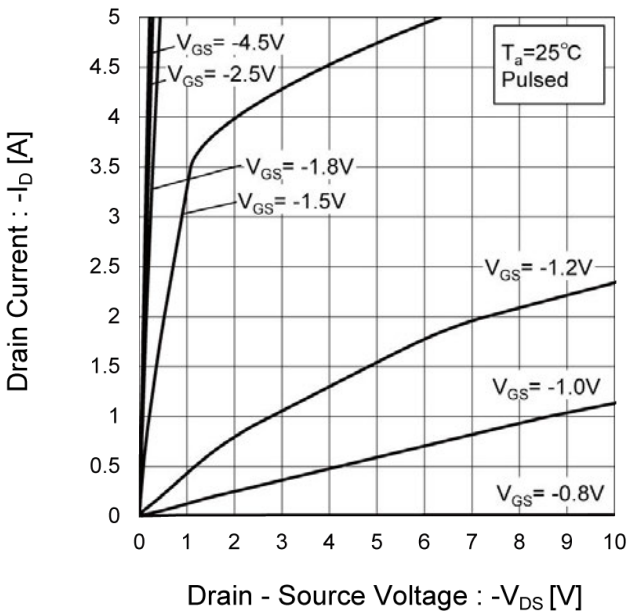

Fig.7 Breakdown Voltage vs. Junction Temperature

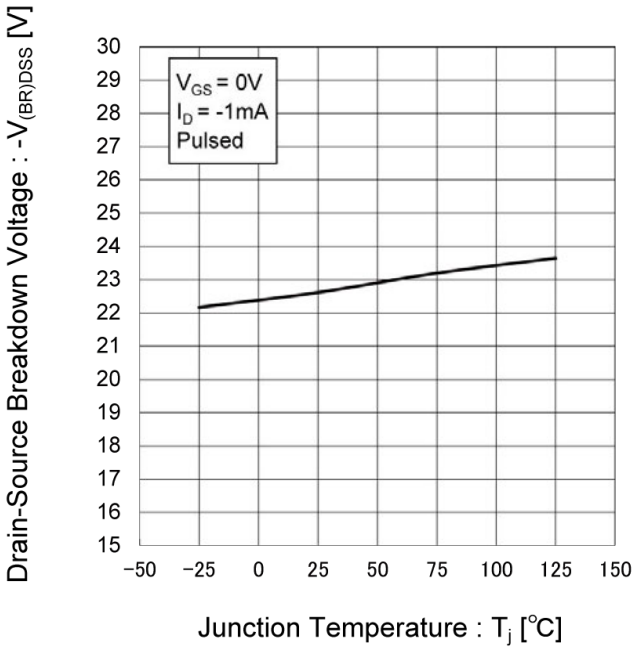

© 2015 ROHM Co., Ltd. All rights reserved.

●Electrical characteristic curves <Tr2>

Fig.8 Typical Transfer Characteristics

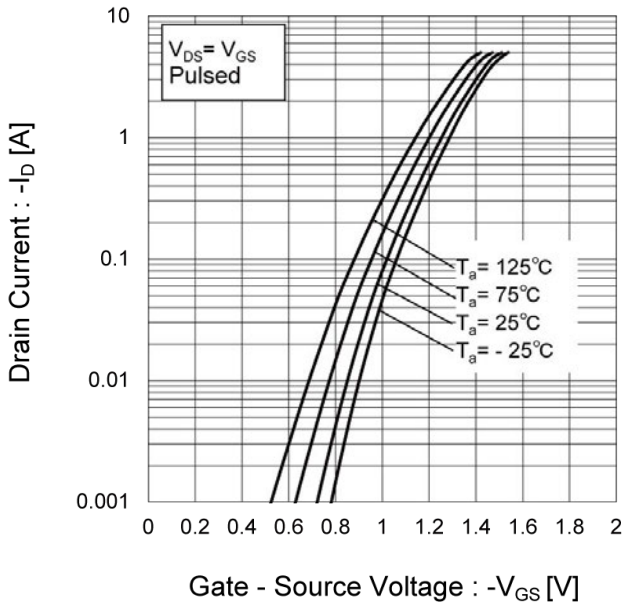

Fig.9 Gate Threshold Voltage vs. Junction Temperature

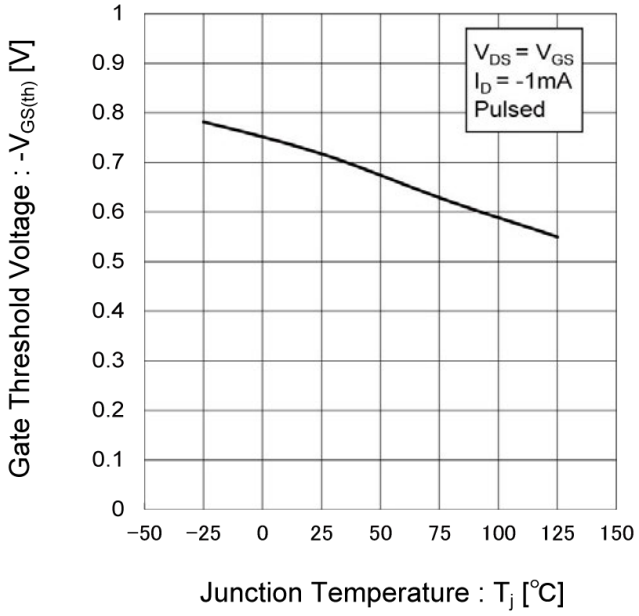

Fig.10 Forward Transfer Admittance vs. Drain Current

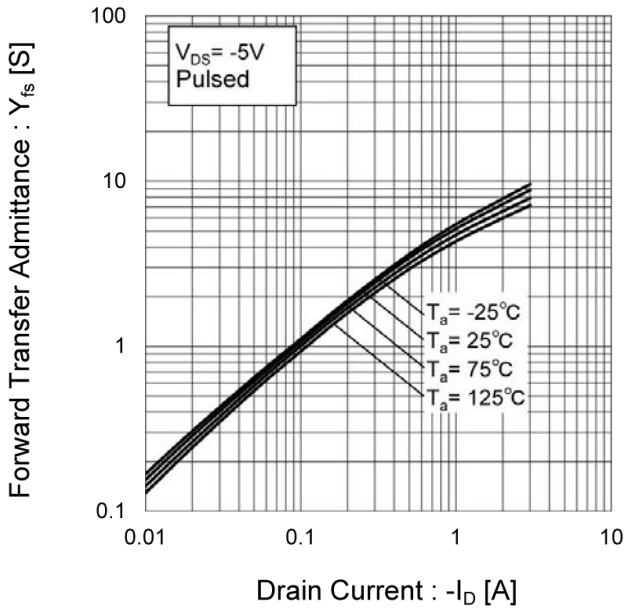

© 2015 ROHM Co., Ltd. All rights reserved.

●Electrical characteristic curves <Tr2>

Fig.11 Drain Current Derating Curve

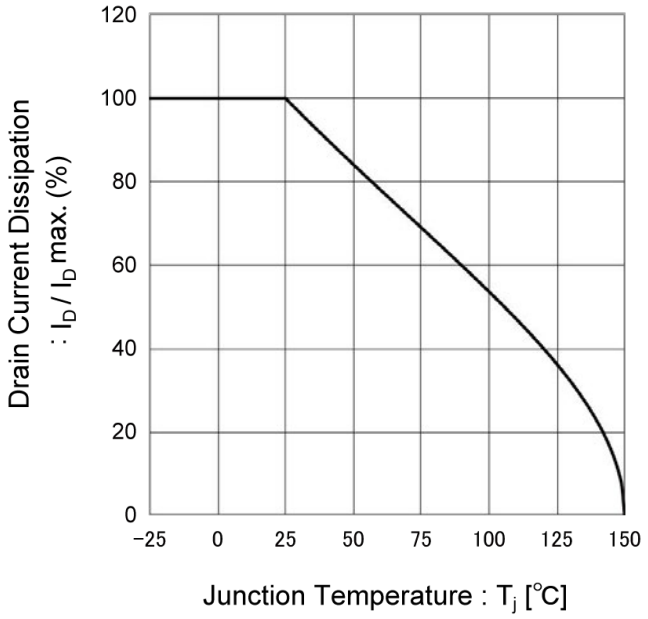

Fig.12 Static Drain - Source On - State Resistance vs. Gate Source Voltage

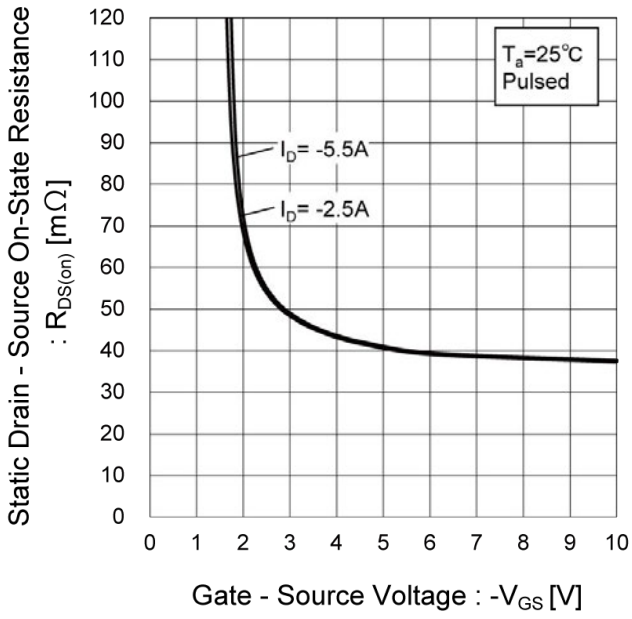

Fig.13 Static Drain - Source On - State Resistance vs. Junction Temperature

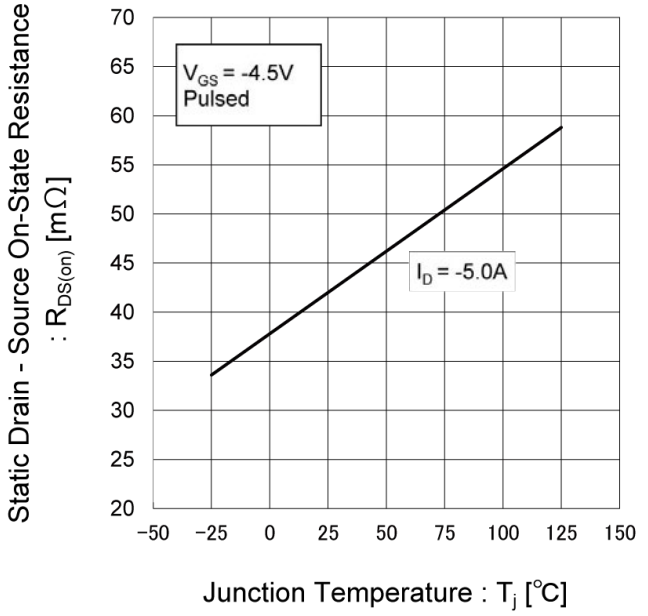

© 2015 ROHM Co., Ltd. All rights reserved.

●Electrical characteristic curves <Tr2>

Fig.14 Static Drain - Source On - State Resistance vs. Drain Current(I)

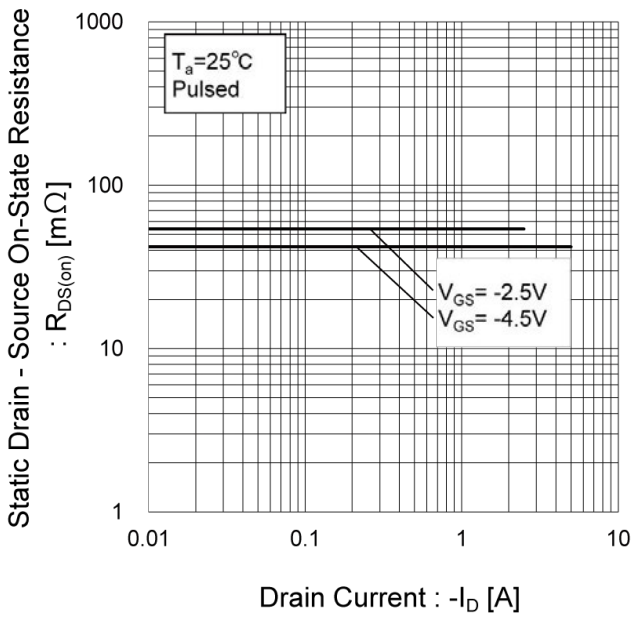

Fig.15 Static Drain - Source On - State Resistance vs. Drain Current(II)

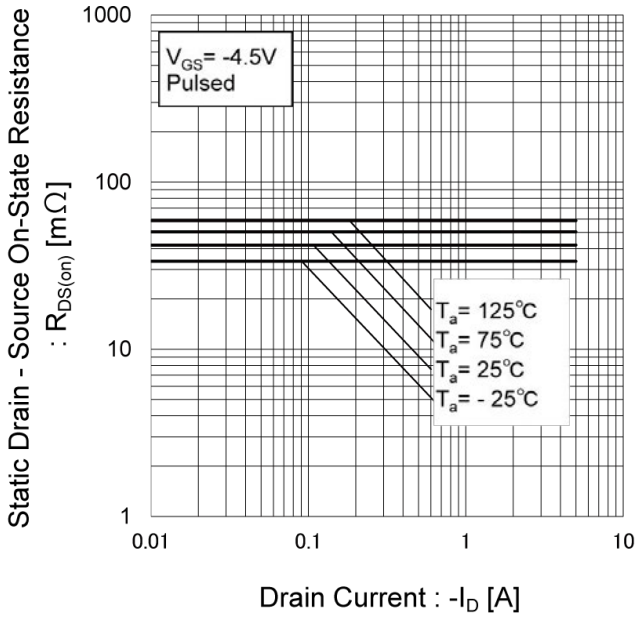

Fig.16 Static Drain - Source On - State Resistance vs. Drain Current(III)

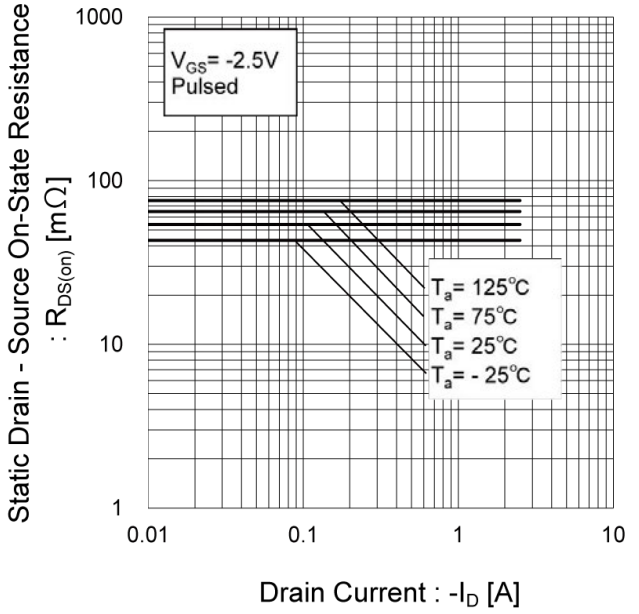

© 2015 ROHM Co., Ltd. All rights reserved.

●Electrical characteristic curves <Tr2>

Fig.17 Typical Capacitance vs. Drain - Source Voltage

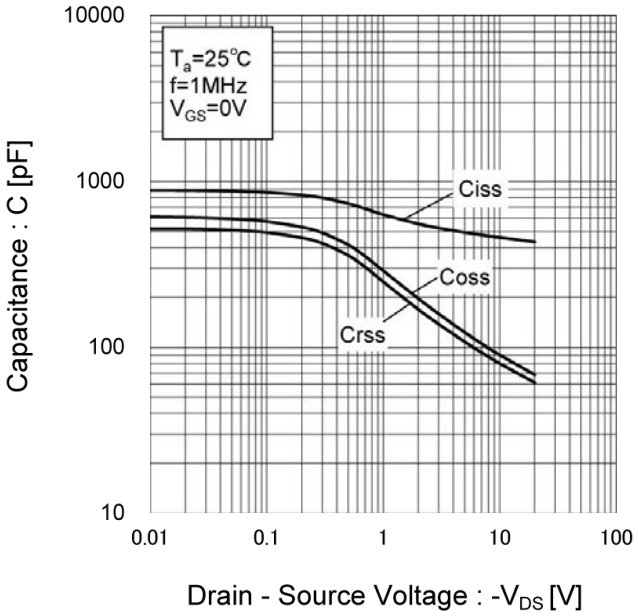

Fig.18 Switching Characteristics

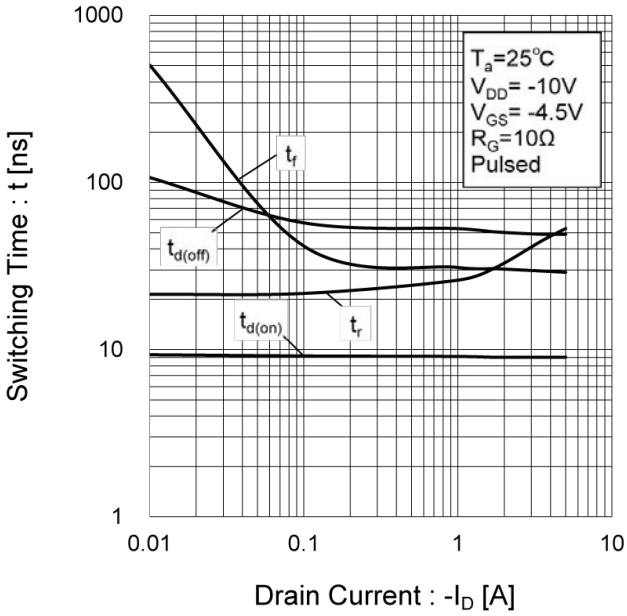

Fig.19 Dynamic Input Characteristics

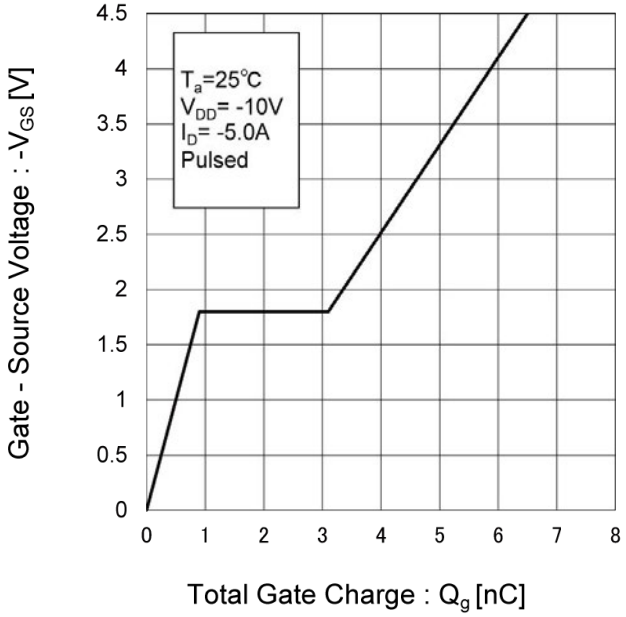

Fig.20 Source Current vs. Source Drain Voltage

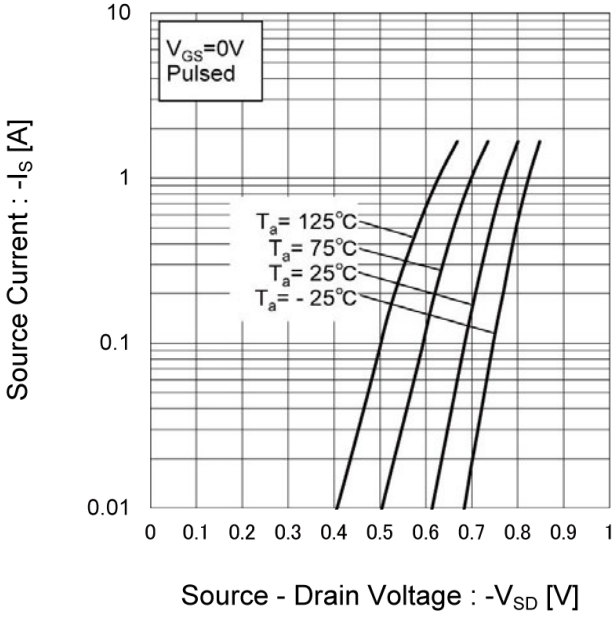

© 2015 ROHM Co., Ltd. All rights reserved.

●Measurement circuits <Tr1>

Fig.1-1 Switching Time Measurement Circuit

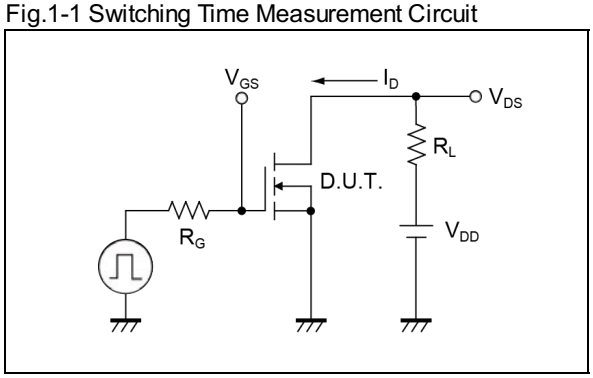

Fig.1-2 Switching Waveforms

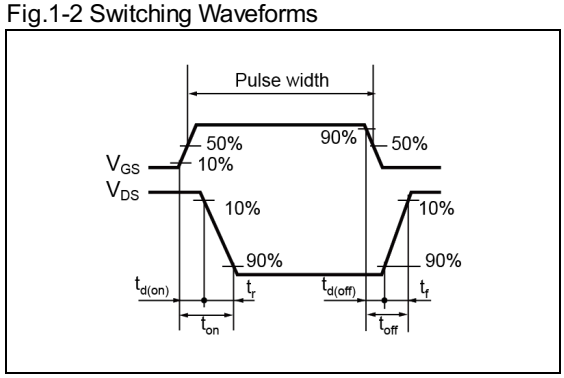

Fig.2-1 Gate Charge Measurement Circuit

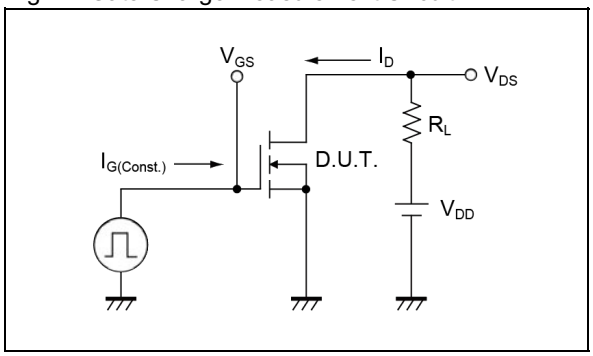

Fig.2-2 Gate Charge Waveform

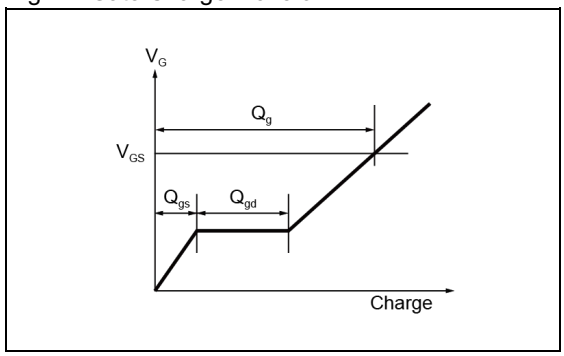

Fig.3-1 Avalanche Measurement Circuit

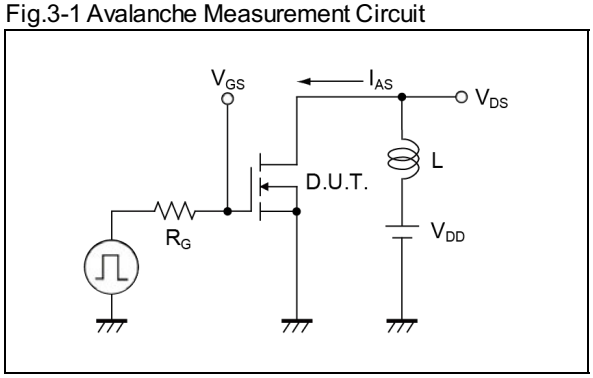

Fig.3-2 Avalanche Waveform

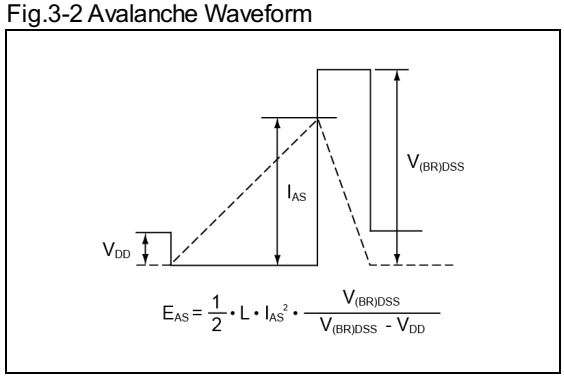

© 2015 ROHM Co., Ltd. All rights reserved.

●Measurement circuits <Tr2>

Fig.4-1 Switching Time Measurement Circuit

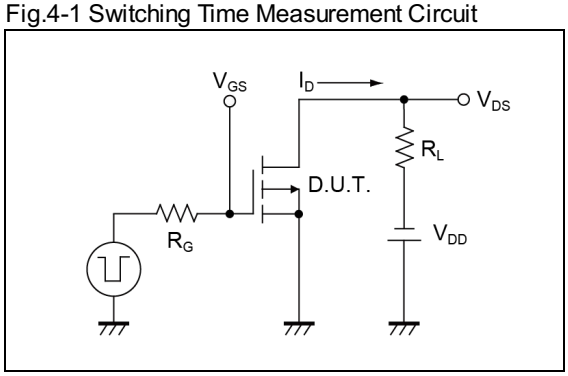

Fig.4-2 Switching Waveforms

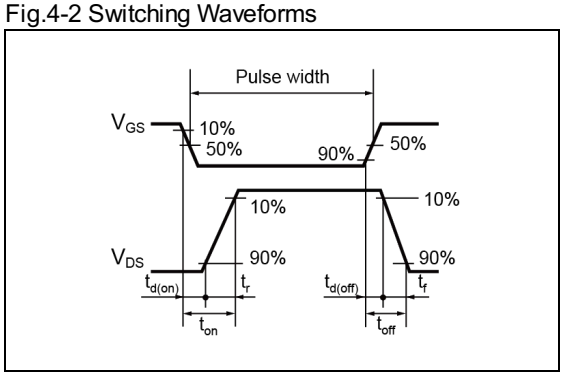

Fig.5-1 Gate Charge Measurement Circuit

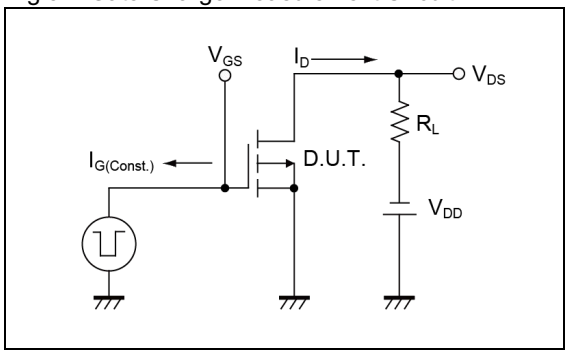

Fig.5-2 Gate Charge Waveform

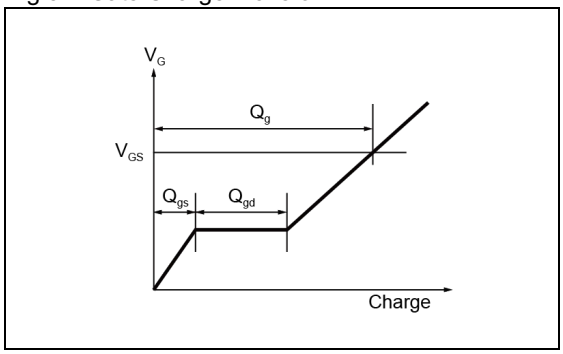

Fig.6-1 Avalanche Measurement Circuit

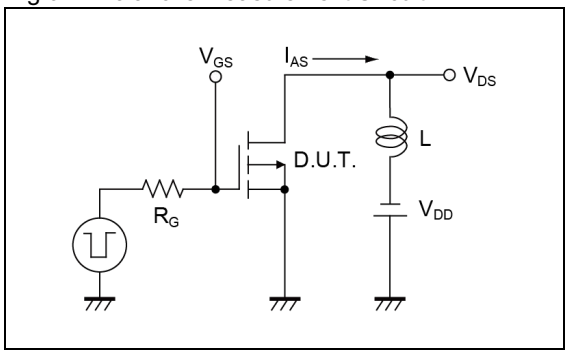

Fig.6-2 Avalanche Waveform

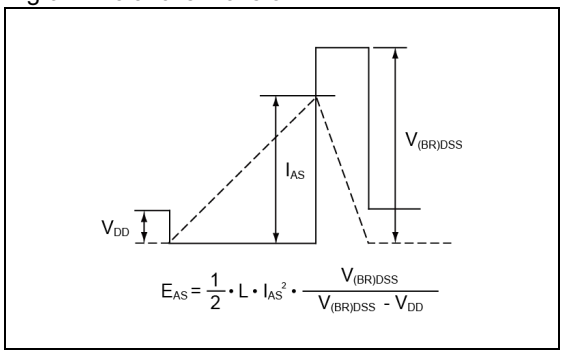

●Notice

This product might cause chip aging and breakdown under the large electrified environment.
Please consider to design ESD protection circuit.

© 2015 ROHM Co., Ltd. All rights reserved.

●Dimensions

HUML2020L8 (Dual)

< DFN2020-8D >

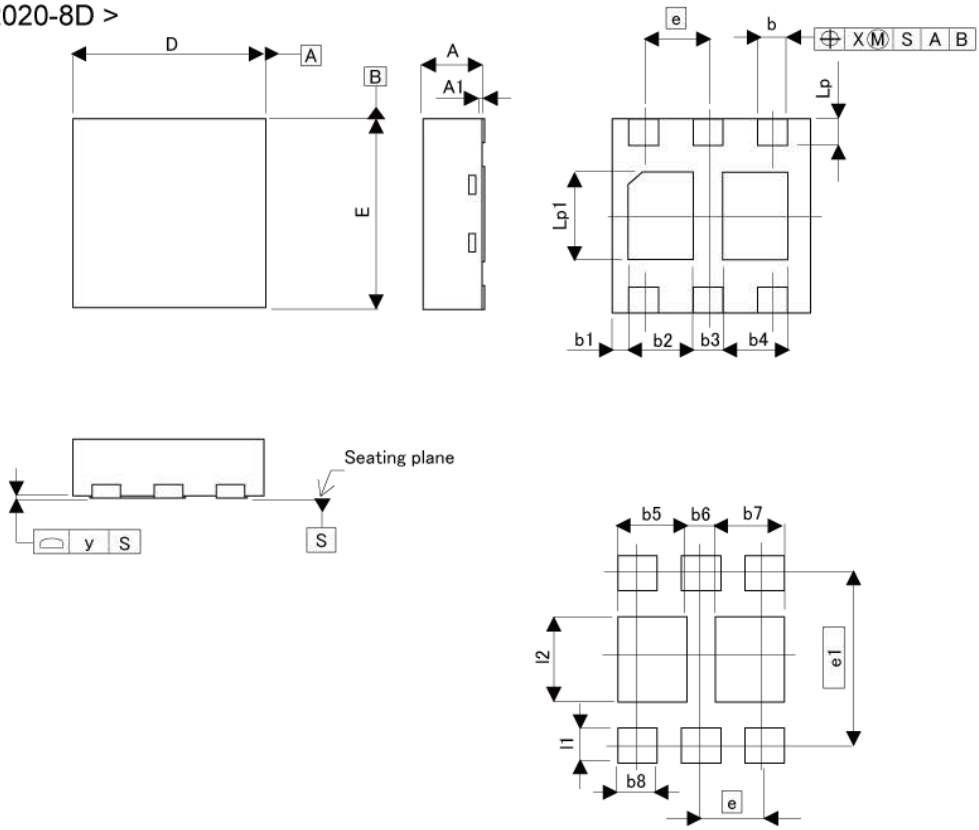

Pattern of terminal position areas
[Not a pattern of soldering pads]

DIM	MILIMETERS		INCHES	
	MIN	MAX	MIN	MAX
A	0.55	0.65	0.022	0.026
A1	0.00	0.05	0.000	0.002
b	0.25	0.35	0.010	0.014
b1	0.25		0.010	
b2	0.60	0.70	0.024	0.028
b3	0.3		0.012	
b4	0.60	0.70	0.024	0.028
D	1.90	2.10	0.075	0.083
E	1.90	2.10	0.075	0.083
e	0.65		0.026	
Lp	0.225	0.325	0.009	0.013
Lp1	0.80	1.00	0.031	0.039
x	-	0.10	-	0.004
y	-	0.10	-	0.004

DIM	MILIMETERS		INCHES	
	MIN	MAX	MIN	MAX
b5	-	0.70	-	0.028
b6	0.20	0.30	0.008	0.012
b7	-	0.70	-	0.028
b8	-	0.45	-	0.018
e1	1.725		0.068	
l1	-	0.425	-	0.017
l2	-	1.00	-	0.039

Dimension in mm/inches

© 2015 ROHM Co., Ltd. All rights reserved.

Notice

Precaution on using ROHM Products

1. Our Products are designed and manufactured for application in ordinary electronic equipments (such as AV equipment, OA equipment, telecommunication equipment, home electronic appliances, amusement equipment, etc.). If you intend to use our Products in devices requiring extremely high reliability (such as medical equipment (Note 1), transport equipment, traffic equipment, aircraft/spacecraft, nuclear power controllers, fuel controllers, car equipment including car accessories, safety devices, etc.) and whose malfunction or failure may cause loss of human life, bodily injury or serious damage to property ("Specific Applications"), please consult with the ROHM sales representative in advance. Unless otherwise agreed in writing by ROHM in advance, ROHM shall not be in any way responsible or liable for any damages, expenses or losses incurred by you or third parties arising from the use of any ROHM's Products for Specific Applications.

(Note1) Medical Equipment Classification of the Specific Applications

JAPAN	USA	EU	CHINA
CLASSⅢ	CLASSⅢ	CLASSⅡb	CLASSⅢ
CLASSⅣ		CLASSⅢ	

2. ROHM designs and manufactures its Products subject to strict quality control system. However, semiconductor products can fail or malfunction at a certain rate. Please be sure to implement, at your own responsibilities, adequate safety measures including but not limited to fail-safe design against the physical injury, damage to any property, which a failure or malfunction of our Products may cause. The following are examples of safety measures:
   [a] Installation of protection circuits or other protective devices to improve system safety
   [b] Installation of redundant circuits to reduce the impact of single or multiple circuit failure

3. Our Products are designed and manufactured for use under standard conditions and not under any special or extraordinary environments or conditions, as exemplified below. Accordingly, ROHM shall not be in any way responsible or liable for any damages, expenses or losses arising from the use of any ROHM's Products under any special or extraordinary environments or conditions. If you intend to use our Products under any special or extraordinary environments or conditions (as exemplified below), your independent verification and confirmation of product performance, reliability, etc, prior to use, must be necessary:
   [a] Use of our Products in any types of liquid, including water, oils, chemicals, and organic solvents
   [b] Use of our Products outdoors or in places where the Products are exposed to direct sunlight or dust
   [c] Use of our Products in places where the Products are exposed to sea wind or corrosive gases, including Cl_2, H_2S, NH_3, SO_2, and NO_2
   [d] Use of our Products in places where the Products are exposed to static electricity or electromagnetic waves
   [e] Use of our Products in proximity to heat-producing components, plastic cords, or other flammable items
   [f] Sealing or coating our Products with resin or other coating materials
   [g] Use of our Products without cleaning residue of flux (even if you use no-clean type fluxes, cleaning residue of flux is recommended); or Washing our Products by using water or water-soluble cleaning agents for cleaning residue after soldering
   [h] Use of the Products in places subject to dew condensation

4. The Products are not subject to radiation-proof design.

5. Please verify and confirm characteristics of the final or mounted products in using the Products.

6. In particular, if a transient load (a large amount of load applied in a short period of time, such as pulse. is applied, confirmation of performance characteristics after on-board mounting is strongly recommended. Avoid applying power exceeding normal rated power; exceeding the power rating under steady-state loading condition may negatively affect product performance and reliability.

7. De-rate Power Dissipation (Pd) depending on Ambient temperature (Ta). When used in sealed area, confirm the actual ambient temperature.

8. Confirm that operation temperature is within the specified range described in the product specification.

9. ROHM shall not be in any way responsible or liable for failure induced under deviant condition from what is defined in this document.

Precaution for Mounting / Circuit board design

1. When a highly active halogenous (chlorine, bromine, etc.) flux is used, the residue of flux may negatively affect product performance and reliability.

2. In principle, the reflow soldering method must be used on a surface-mount products, the flow soldering method must be used on a through hole mount products. If the flow soldering method is preferred on a surface-mount products, please consult with the ROHM representative in advance.

For details, please refer to ROHM Mounting specification

© 2015 ROHM Co., Ltd. All rights reserved.

Precautions Regarding Application Examples and External Circuits

1. If change is made to the constant of an external circuit, please allow a sufficient margin considering variations of the characteristics of the Products and external components, including transient characteristics, as well as static characteristics.

2. You agree that application notes, reference designs, and associated data and information contained in this document are presented only as guidance for Products use. Therefore, in case you use such information, you are solely responsible for it and you must exercise your own independent verification and judgment in the use of such information contained in this document. ROHM shall not be in any way responsible or liable for any damages, expenses or losses incurred by you or third parties arising from the use of such information.

Precaution for Electrostatic

This Product is electrostatic sensitive product, which may be damaged due to electrostatic discharge. Please take proper caution in your manufacturing process and storage so that voltage exceeding the Products maximum rating will not be applied to Products. Please take special care under dry condition (e.g. Grounding of human body / equipment / solder iron, isolation from charged objects, setting of Ionizer, friction prevention and temperature / humidity control).

Precaution for Storage / Transportation

1. Product performance and soldered connections may deteriorate if the Products are stored in the places where:
   [a] the Products are exposed to sea winds or corrosive gases, including Cl2, H2S, NH3, SO2, and NO2
   [b] the temperature or humidity exceeds those recommended by ROHM
   [c] the Products are exposed to direct sunshine or condensation
   [d] the Products are exposed to high Electrostatic

2. Even under ROHM recommended storage condition, solderability of products out of recommended storage time period may be degraded. It is strongly recommended to confirm solderability before using Products of which storage time is exceeding the recommended storage time period.

3. Store / transport cartons in the correct direction, which is indicated on a carton with a symbol. Otherwise bent leads may occur due to excessive stress applied when dropping of a carton.

4. Use Products within the specified time after opening a humidity barrier bag. Baking is required before using Products of which storage time is exceeding the recommended storage time period.

Precaution for Product Label

QR code printed on ROHM Products label is for ROHM's internal use only.

Precaution for Disposition

When disposing Products please dispose them properly using an authorized industry waste company.

Precaution for Foreign Exchange and Foreign Trade act

Since concerned goods might be fallen under listed items of export control prescribed by Foreign exchange and Foreign trade act, please consult with ROHM in case of export.

Precaution Regarding Intellectual Property Rights

1. All information and data including but not limited to application example contained in this document is for reference only. ROHM does not warrant that foregoing information or data will not infringe any intellectual property rights or any other rights of any third party regarding such information or data.

2. ROHM shall not have any obligations where the claims, actions or demands arising from the combination of the Products with other articles such as components, circuits, systems or external equipment (including software).

3. No license, expressly or implied, is granted hereby under any intellectual property rights or other rights of ROHM or any third parties with respect to the Products or the information contained in this document. Provided, however, that ROHM will not assert its intellectual property rights or other rights against you or your customers to the extent necessary to manufacture or sell products containing the Products, subject to the terms and conditions herein.

Other Precaution

1. This document may not be reprinted or reproduced, in whole or in part, without prior written consent of ROHM.

2. The Products may not be disassembled, converted, modified, reproduced or otherwise changed without prior written consent of ROHM.

3. In no event shall you use in any way whatsoever the Products and the related technical information contained in the Products or this document for any military purposes, including but not limited to, the development of mass-destruction weapons.

4. The proper names of companies or products described in this document are trademarks or registered trademarks of ROHM, its affiliated companies or third parties.

© 2015 ROHM Co., Ltd. All rights reserved.

General Precaution

1. Before you use our Products, you are requested to carefully read this document and fully understand its contents. ROHM shall not be in any way responsible or liable for failure, malfunction or accident arising from the use of any ROHM's Products against warning, caution or note contained in this document.

2. All information contained in this document is current as of the issuing date and subject to change without any prior notice. Before purchasing or using ROHM's Products, please confirm the latest information with a ROHM sales representative.

3. The information contained in this document is provided on an "as is" basis and ROHM does not warrant that all information contained in this document is accurate and/or error-free. ROHM shall not be in any way responsible or liable for any damages, expenses or losses incurred by you or third parties resulting from inaccuracy or errors of or concerning such information.

© 2015 ROHM Co., Ltd. All rights reserved.

Mouser Electronics

Authorized Distributor

Click to View Pricing, Inventory, Delivery & Lifecycle Information:

ROHM Semiconductor:

UT6MA3TCR