Wireless Power Consortium / Qi Compliant series

Wireless Power Transmitter IC

BD57020MWV

General Description

BD57020MWV is an integrated IC for the wireless power transmitter. This device is composed of inverters for the coil drive, controller for the communication of the Qi compliant and demodulating circuit, GPIO, TCXO buffer, and I2C interface.
BD57020MWV works as a controller in the wireless power transmitter based on the Qi compliant by using it with a general-purpose microcomputer.
BD57020MWV is applied to Qi ver.1.2 BPP / EPP (Baseline Power Profile / Extended Power Profile).

Features

- WPC / Qi ver.1.2 BPP / EPP (Baseline Power Profile / Extended Power Profile) support.
- Half Bridge / Full Bridge inverter
- Foreign object detection
- GPIO 4CH
- I2C bus interface
- 5.0mm x 5.0mm UQFN package 40 pin

Key Specifications

- Input Power Supply Voltage Range: 4.2 V to 5.3 V
- Input Adapter Voltage Range: 4.6 V to 20 V
- Drive Frequency Range: 110kHz to 205kHz
- Operating Temperature Range: -20°C to +85°C

Package	W(Typ) x D(Typ) x H(Max)
UQFN040V5050	5.00mm x 5.00mm x 1.00mm

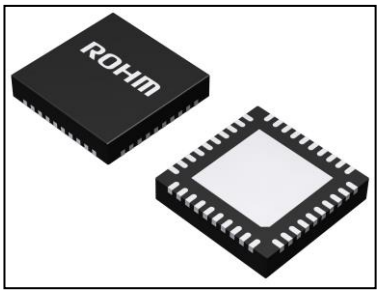

Applications

WPC compliant devices
- PC
- Cradle for charge stand

Typical Application Circuit

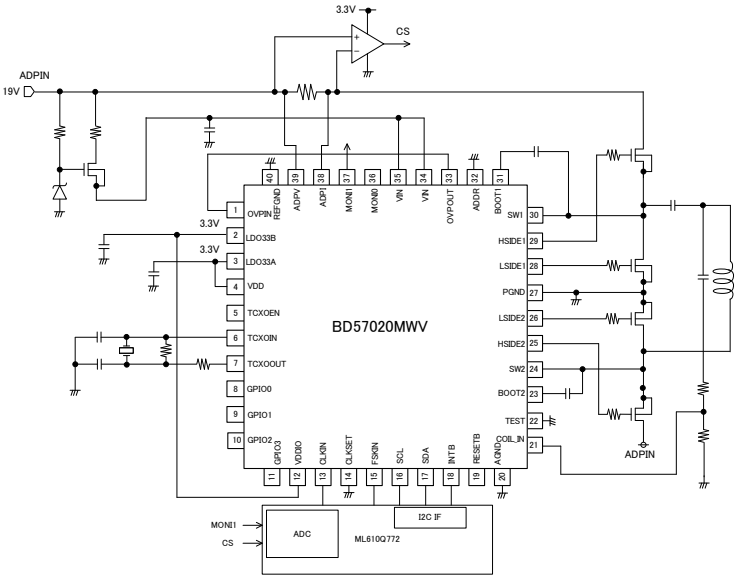

Figure 1. Typical application circuit

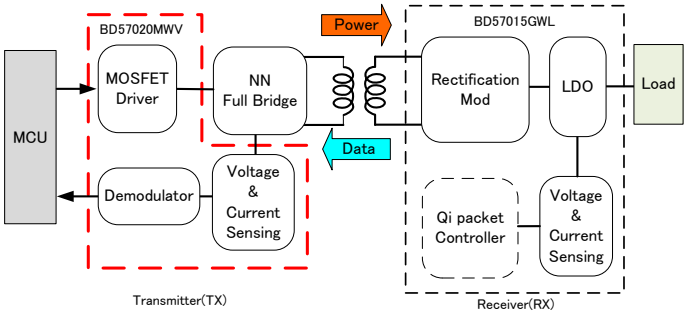

Figure 2. Product position in wireless power supply system

○Product structure : Silicon monolithic integrated circuit ○This product has no designed protection against radioactive rays

© 2015 ROHM Co., Ltd. All rights reserved.

Absolute Maximum Ratings

Parameter	Symbol	Rating	Unit
VIN, ADPV, ADPI, SW1, SW2 voltage	VIN_H1	-0.3 to 24.0	V
BOOT1, BOOT2 voltage	VIN_H2	-0.3 to 31.0	V
HSIDE1, HSIDE2 voltage	VOUT_H	-0.3 to 31.0	V
OVPIN, VDDIO, CLKIN, CLKSET, FSKIN, SCL, RESETB, TEST, ADDR voltage	VIN_L1	-0.3 to 7.0	V
VDD, TCXOIN voltage	VIN_L2	-0.3 to 4.5	V
COIL_IN voltage	VIN_L3	-4.5 to 7.0	V
LDO33A, LDO33B , INTB, LSIDE1, LSIDE2, OVPOUT, MONI0, MONI1 voltage	VOUT_L1	-0.3 to 7.0	V
TCXOEN, TCXOOUT voltage	VOUT_L2	-0.3 to 4.5	V
SDA voltage	VINOUT_L1	-0.3 to7.0	V
GPIO0, GPIO1, GPIO2, GPIO3 voltage	VINOUT_L2	-0.3 to 4.5	V
Power dissipation	Pd	3.26 (Note 1)	W
Operating ambient temperature range	Ta	-20 to +85	°C
Storage temperature range	Tstg	-55 to +150	°C

(Note 1) Derate by 26 mW/°C when operating above Ta=25°C (Mount on 4-layer 74.2mm x 74.2mm x 1.6mm board with front and back layer heat radiation copper foil 4.5 mm x 4.5 mm, second and third layer heat radiation copper foil 74.2 mm x 74.2 mm).

Caution: Operating the IC over the absolute maximum ratings may damage the IC. The damage can either be a short circuit between pins or an open circuit between pins and the internal circuitry. Therefore, it is important to consider circuit protection measures, such as adding a fuse, in case the IC is operated over the absolute maximum ratings.

Recommended Operating Conditions (Ta= -20°C to +85°C)

Parameter	Symbol	Min	Typ	Max	Unit
VIN terminal input voltage range	VIN	4.2	5.0	5.3	V
VDD terminal input voltage range	VDD	3.1	3.3	3.5	V
VDDIO terminal voltage range	VDDIO	3.1	3.3	3.5	V
Adapter input voltage range	VADPV	4.6	-	20	V
TCXO terminal input frequency range	FTCXO	32	-	52	MHz

© 2015 ROHM Co., Ltd. All rights reserved.

Electrical Characteristics (Unless otherwise specified VIN=5V VDD=3.3V Ta=25°C)

Parameter	Symbol	Limit			Unit	Conditions
		Min	Typ	Max		
Whole Chip						
Operating circuit current 1	I_{CC1}	-	2.0	3.0	mA	TCXOIN=0kHz
Operating circuit current 2	I_{CC2}	-	15.0	23.0	mA	TCXOIN=32MHz
Protection block (the IC outside)						
External OCP operating voltage	V_{OCP}	125	160	195	mV	R_S=100mΩ
Protective circuit (the IC inside)						
VIN Over voltage lockout	V_{OVLO_VIN}	6.1	6.4	6.7	V	VIN: 5.0 → 8.0V
Hysteresis on OVLO	V_{OVLO_HYS}	140	200	260	mV	VIN: 8.0 → 5.0V
VIN Under voltage lockout	V_{UVLO_VIN}	3.3	3.6	3.9	V	VIN: 5.0 → 0V
Hysteresis on UVLO	V_{UVLO_HYS}	140	200	260	mV	VIN: 0 → 5.0V
VDD UVLO detection voltage	V_{UVLOD_VDD}	2.25	2.50	2.75	V	VDD: 3.3 → 0V
VDD UVLO release voltage	V_{UVLOR_VDD}	2.55	2.80	3.05	V	VDD: 0 → 3.3V
VDDIO UVLO detection voltage	V_{UVLOD_VDDIO}	2.25	2.50	2.75	V	VDDIO: 3.3 → 0V
VDDIO UVLO release voltage	V_{UVLOD_VDDIO}	2.55	2.80	3.05	V	VDDIO: 0 → 3.3V
Internal OCP operating current	I_{OCP}	-	0.48	0.65	A	
LDO33A block						
LDO33A output voltage	V_{LDO33A}	3.2	3.3	3.4	V	I_{source}=10mA
LDO33A maximum output current	I_{LDO33A}	-	-	30	mA	
LDO33B block						
LDO33B output voltage	V_{LDO33B}	3.2	3.3	3.4	mV	I_{source}=10mA
LDO33B maximum output current	I_{LDO33B}	-	-	30	mA	
Demodulating circuit block						
COIL_IN leak current 1	$ILEAK_{COILIN1}$	-	-	50	µA	VCOIL_IN=3.3V
COIL_IN leak current 2	$ILEAK_{COILIN2}$	-150	-	-	µA	VCOIL_IN=-3.3V
TCXO_BUFF block						
TCXOIN input current	I_{TCXOIN}	-	0	1.0	µA	VDD=VTCXOIN=4.5V
Input frequency range	F_{TCXOIN}	-	-	52	MHz	
TCXOEN L level output voltage	VOH_{TXCOEN}	-	-	VDD x 0.2	V	I_{sink}=1.0mA
TCXOEN H level output voltage	VOL_{TXCOEN}	VDD x 0.8	-	-	V	I_{source}=1.0mA
TCXOOUT output impedance	$ZO_{TCXOOUT}$	-	1.0	-	kΩ	
Inverter block						
Drive frequency	F_{DRIVE}	110	-	205	kHz	
Minimum Duty Ratio	$Duty_{min}$	-	25	-	%	
Dead Time	T_{Dead}	-	200	-	ns	TCXOIN=32MHz
Source resistance	R_{SOURCE}	-	1.0	-	Ω	
Sink resistance	R_{SINK}	-	0.8	-	Ω	
GPIO block						
GPIO L level input voltage	VOL_{GPIO}	-	-	VDD x 0.3	V	
GPIO H level input voltage	VOH_{GPIO}	VDD x 0.7	-	-	V	
GPIO pull-down resistor	RPD_{GPIO}	-	100		kΩ	
GPIO pull-up resister	RPU_{GPIO}	-	100	-	kΩ	
GPIO L level output voltage	VIL_{GPIO}	-	-	VDD x 0.2	V	I_{sink}=1.0mA
GPIO H level output voltage	VIH_{GPIO}	VDD x 0.8	-	-	V	I_{source}=1.0mA

© 2015 ROHM Co., Ltd. All rights reserved.

Parameter	Symbol	Limit			Unit	Conditions
		Min	Typ	Max		
FSKIN terminal						
FSKIN L level input voltage	VIL_{FSKIN}	-	-	VDDIO x 0.3	V	
FSKIN H level input voltage	VIH_{FSKIN}	VDDIO x 0.7	-	-	V	
CLKIN terminal						
CLKIN L level input voltage	VIL_{CLKIN}	-	-	VDDIO x 0.3	V	
CLKIN H level input voltage	VIH_{CLKIN}	VDDIO x 0.7	-	-	V	
ADDR terminal						
ADDR L level input voltage	VIL_{ADDR}	-	-	VDDIO x 0.3	V	
ADDR H level input voltage	VIH_{ADDR}	VDDIO x 0.7	-	-	V	
INTB terminal						
Open Drain ability on INTB	VL_{INTB}	-	380	500	mV	I_{sink}=5.0mA
INTB leak current	$ILEAK_{INTB}$	-	-	2.0	µA	VINTB=7.0V
RESETB terminal						
RESETB L level input voltage	VIL_{RSTB}	-	-	VDD x 0.3	V	
RESETB H level input voltage	VIH_{RSTB}	VDD x 0.7	-	-	V	
RESETB pull-up resister	RPD_{RSTB}	-	100	-	kΩ	
I2C interface						
SCL, SDA L level input voltage	VIL_{I2C}	-	-	0.50	V	
SCL, SDA H level input voltage	VIH_{I2C}	1.50	-	-	V	
SCL, SDA L level input current	IIL_{I2C}	-1.0	-	-	µA	
SCL, SDA H level input current	IIH_{I2C}	-	-	1.0	µA	
SDA L level output voltage	VOL_{I2C}	-	-	400	mV	I_{sink}=3.0mA

Pin Configuration

(TOP VIEW)

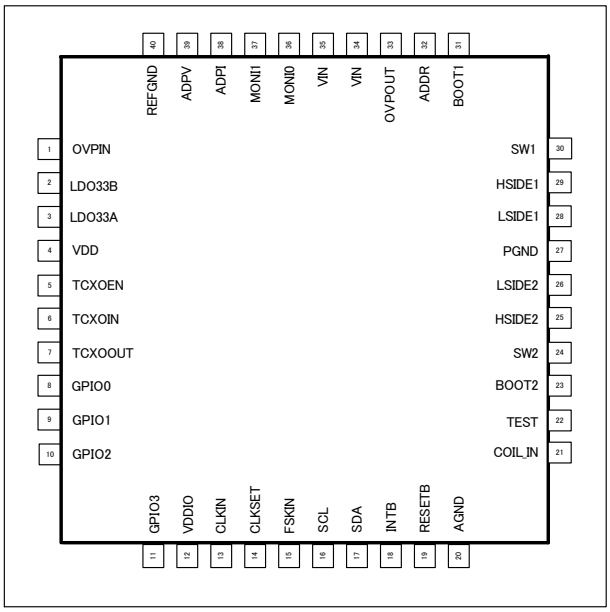

Figure 3. Pin Configuration

© 2015 ROHM Co., Ltd. All rights reserved.

Pin Description

Pin No.	Pin Name	Function	I/O
1	OVPIN	5.0V input, connected to OVPOUT.	I
2	LDO33B	3.3V LDO output.	O
3	LDO33A	3.3V LDO output.	O
4	VDD	3.3V supply.	I
5	TCXOEN	Connected to External oscillator. Control signal output.	O
6	TCXOIN	Connected to External oscillator.	I
7	TCXOOUT	Connected to External oscillator.	O
8	GPIO0	General-purpose input and output terminal.	I/O
9	GPIO1	General-purpose input and output terminal.	I/O
10	GPIO2	General-purpose input and output terminal.	I/O
11	GPIO3	General-purpose input and output terminal.	I/O
12	VDDIO	3.3V supply.	I
13	CLKIN	Clock input terminal, leave this pin open.	I
14	CLKSET	Test terminal, leave this pin open.	I
15	FSKIN	FSK control signal input.	I
16	SCL	I2C clock input	I
17	SDA	I2C Data input and output.	I/O
18	INTB	Interrupt detection output.	O
19	RESETB	Control logic reset	I/O
20	AGND	Analog ground.	I
21	COIL_IN	Coil current / voltage input.	I
22	TEST	Test terminal, connected to GND.	I
23	BOOT2	Connected to Boot strap capacitor.	I
24	SW2	Connected to the source of high side FET and the drain of low side FET.	I
25	HSIDE2	Connected to the gate of high side FET.	O
26	LSIDE2	Connected to the gate of low side FET.	O
27	PGND	Power ground.	I
28	LSIDE1	Connected to the gate of low side FET.	O
29	HSIDE1	Connected to the gate of high side FET.	O
30	SW1	Connected to the source of high side FET and the drain of low side FET.	I
31	BOOT1	Connected to Boot strap capacitor.	I
32	ADDR	Slave Address change.	I
33	OVPOUT	5.0V output, connected to OVPIN.	O
34	VIN	5.0V Input power supply	I
35	VIN	5.0V Input power supply	I
36	MONI0	Coil current value output.	O
37	MONI1	Input voltage value output.	O
38	ADPI	Sense transmitter Input current.	I
39	ADPV	Sense transmitter Input voltage.	I
40	REFGND	Reference ground.	I

© 2015 ROHM Co., Ltd. All rights reserved.

Block Diagram

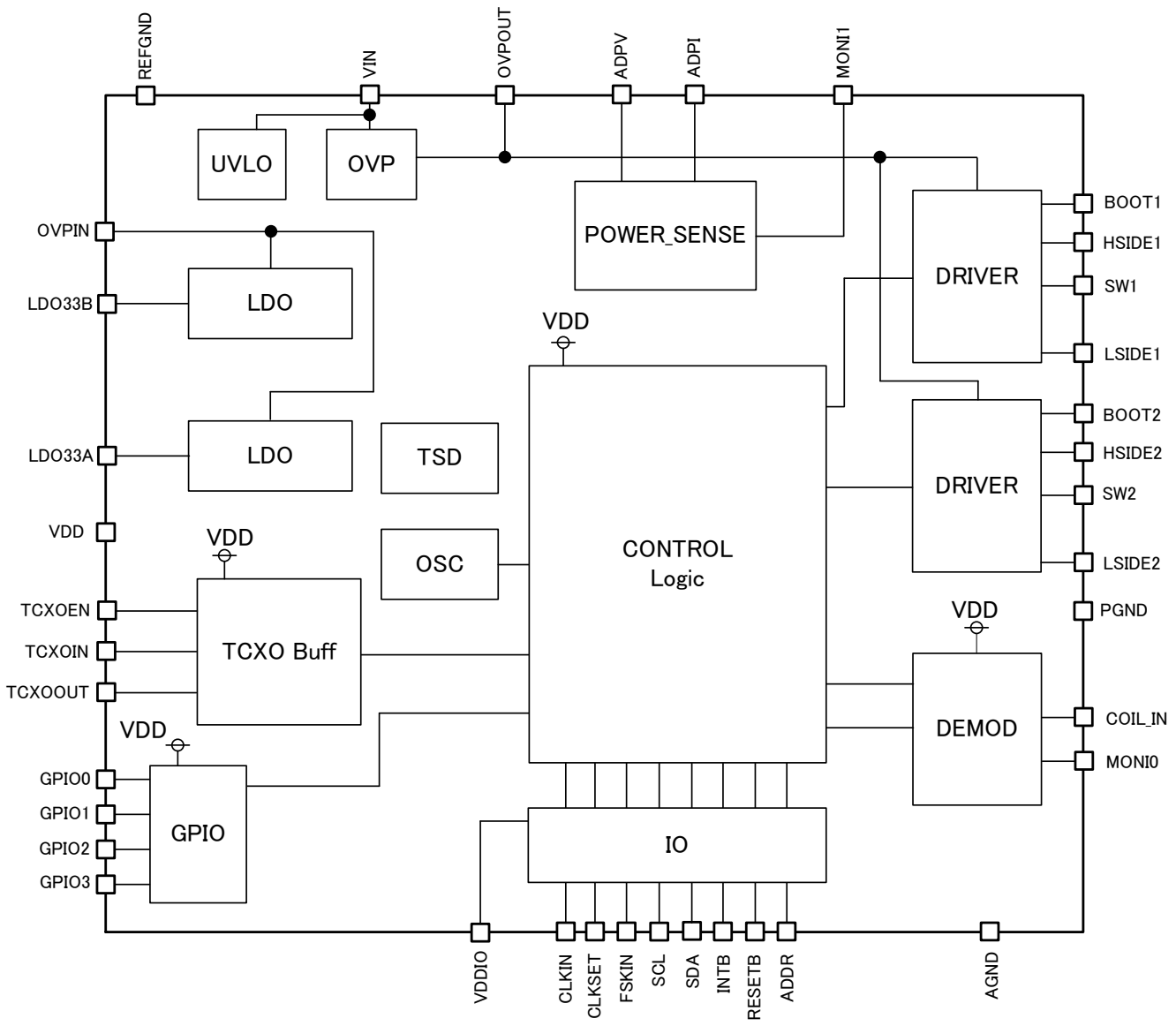

Figure 4. Block diagram

© 2015 ROHM Co., Ltd. All rights reserved.

Description of Blocks

1. Pre-driver block

Transmitter (Tx) includes inverter circuits to input AC electricity into both ends of the primary coil and to produce the electromotive force on the secondary side by electromagnetic induction. BD57020MWV includes two pre-driver blocks to support Half Bridge inverter and Full Bridge inverter configurations. For the Half Bridge inverter configuration, it is necessary to set the pre-driver 1 (PWM0 signal). For the Full Bridge inverter configuration, it is necessary to set the pre-driver 1 and pre-driver 2 (PWM1 signal). The output power control modes are the frequency control, the duty control and the phase control. The pre-driver block prevents a through current by monitoring the on/off timing of low side FET and high side FET.

For high efficiency, the bootstrap drive system which sets the H side-L side to Nch FET is adopted. It is necessary to put a capacitor (0.1 – 0.47 µF) between the BOOT1 (BOOT2) terminal and the SW1 (SW2) terminal to maintain the voltage potential between these pins. Install a ceramic capacitor as close to these pins as possible.

2. Digital Ping

Tx inputs AC electricity into the primary coil and by electromagnetic induction develops an electromotive force on the secondary coil which starts the Receiver (Rx). This phase is called Digital Ping. Tx keeps transmitting power as long as it receives Digital Ping from the Rx. Tx controls the transmission power based on a packet including the power incoming information from Rx. The following registers are used to configure Digital Ping.

(1) PWM0PRD: Setting register for the period of PWM0 signal

This register is used to set the period of PWM0 signal. The PWM0 signal sets the period of the pulse to be output from pre-driver 1 with a count level. The relation between the period of PWM0 signal and source clock is determined by the following formula:

$$PWM0PRD = round\left(\frac{SourceClock}{TargetClock}\right) - 1$$

Where “round” means rounding off to the nearest whole number and the source clock is from the TCXO.

For example, if source clock=32MHz and target clock=100kHz, PWM0PRD register is set to the following value:

$$PWM0PRD = round\left(\frac{32000}{100}\right) - 1 = 319 = 0x013F$$

Name	Address	b7	b6	b5	b4	b3	b2	b1	b0	Initial Value	R/W
PWM0 PRDL	0x20	PWM0 PRD7	PWM0 PRD6	PWM0 PRD5	PWM0 PRD4	PWM0 PRD3	PWM0 PRD2	PWM0 PRD1	PWM0 PRD0	0x00	R/W
PWM0 PRDH	0x21	PWM0 PRD15	PWM0 PRD14	PWM0 PRD13	PWM0 PRD12	PWM0 PRD11	PWM0 PRD10	PWM0 PRD9	PWM0 PRD8	0x00	R/W

After PWM0DTYH (0x23) is written, this register is updated with the new data.

(2) PWM0DTY: Setting register for the duty of PWM0 signal

This register is used to set the duty of PWM0 signal. PWM0 signal is the output signal at pre-driver 1. The duty of PWM0 signal is set with the count number of the source clock. After this register has been written, when the counter number of PWM0 signal becomes 0, the data of PWM0PRD register and PWM0DTY register are updated with the new data. The relation between the duty of PWM0 signal and source clock is determined by the following formula:

$$PWM0DTY = int\left\{(PWM0PRD + 1) \times \left(\frac{Duty}{100}\right)\right\}$$

Where “int” means rounding down to the nearest whole number and the source clock is from TCXO.

For example, if source clock= 32MHz and target clock=100kHz with duty=50%, PWM0DTY register is set to the following value:

$$PWM0DTY = int\left\{(320 + 1) \times \left(\frac{50}{100}\right)\right\} = 160 = 0x00A0$$

© 2015 ROHM Co., Ltd. All rights reserved.

Duty is defines as the ratio between the amount of time when the output is high in one period to the whole period of PWM0 signal. The enable range of PWM0DTY register is from 0x0001 to (PWM0PRD-1). PWM0 will not be generated if the PWM0DTY register is set to a value greater than or equal to the value in PWM0PRD register.

Name	Address	b7	b6	b5	b4	b3	b2	b1	b0	Initial Value	R/W
PWM0 DTYL	0x22	PWM0 DTY7	PWM0 DTY6	PWM0 DTY5	PWM0 DTY4	PWM0 DTY3	PWM0 DTY2	PWM0 DTY1	PWM0 DTY0	0x00	R/W
PWM0 DTYH	0x23	PWM0 DTY15	PWM0 DTY14	PWM0 DTY13	PWM0 DTY12	PWM0 DTY11	PWM0 DTY10	PWM0 DTY9	PWM0 DTY8	0x00	R/W

(3) PWM1PHS: Setting register for the phase difference between PWM1 signal and PWM0 signal

This register is used to set the phase difference between PWM1 signal and PWM0 signal with the count number of the source clock. PWM1 signal is a signal with the same period and duty as PWM0 signal. After PWM0DTYH register (0x23) is written and the counter number of PWM0PRD register becomes 0, the data of this register is updated with the new data. The enable range of this register is from 0x0001 to (PWM0PRD). PWM1 signal will not be generated if the PWM1PHS register is set to a value greater than or equal to the value in PWM0PRD register. It is also necessary to write 0x23 in PWM0DTYH register after this register has been written.

Name	Address	b7	b6	b5	b4	b3	b2	b1	b0	Initial Value	R/W
PWM1 PHSL	0x24	PWM1 PHS7	PWM1 PHS6	PWM1 PHS5	PWM1 PHS4	PWM1 PHS3	PWM1 PHS2	PWM1 PHS1	PWM1 PHS0	0x00	R/W
PWM1 PHSH	0x25	PWM1 PHS15	PWM1 PHS14	PWM1 PHS13	PWM1 PHS12	PWM1 PHS11	PWM1 PHS10	PWM1 PHS9	PWM1 PHS8	0x00	R/W

(4) PWM0GEN: Setting register for the dead time of PWM0 signal

This register is used to set the dead time of PWM0 signal. The relation between the dead time and the source clock is defined by the following formula:

$$DeadTime = \frac{2}{SourceClock}$$

For example, if source clock=32MHz, Dead Time is the smallest value and it is 62.5nsec.
Additionally, please set this register to the following value.
Full Bridge inverter: PWMGEN0= 0x49
Half Bridge inverter: PWMGEN0= 0x10

Name	Address	b7	b6	b5	b4	b3	b2	b1	b0	Initial Value	R/W
PWMGEN0	0x30	P0DLY D1	P0DLY D0	P0DLY C2	P0DLY C1	P0DLY C0	P0DLY B2	P0DLY B1	P0DLY B0	0x92	R/W

(5) PWM1GEN: Setting register for the dead time of PWM1 signal

This register is used to set the dead time of PWM1 signal. The relation between the dead time and source clock is determined by the following formula:

$$DeadTime = \frac{2}{SourceClock}$$

For example, if source clock=32MHz, Dead Time is the smallest value and it is 62.5nsec.
Additionally, please set this register to the following value.
Full Bridge inverter: PWMGEN1= 0x49
Half Bridge inverter: PWMGEN1= 0x10

Name	Address	b7	b6	b5	b4	b3	b2	b1	b0	Initial Value	R/W
PWMGEN1	0x31	P1DLY D1	P1DLY D0	P1DLY C2	P1DLY C1	P1DLY C0	P1DLY B2	P1DLY B1	P1DLY B0	0x92	R/W

(6) PWRCTRL: Setting register for the operation mode

This register is used to set the operation mode and the base clock for the internal movement. By setting the power mode bit (PWMD0, PWMD1), the operation mode is changed. The operation mode is Digital Ping when PWMD=0x0. Meanwhile, the operation mode is Analog Ping, which is also the low power consumption mode, when PWMD=0x1. On the other hand, the operation is Stop Mode when PWMD=0x3. During Stop Mode, all blocks are stopped.
BD57020MWV uses the input clock signal from TCXOIN terminal for source clock of the internal movement.
Please set this register with TCXSEL = 1, and connect TCXO with frequency between 32 to 52MHz to TCXOIN terminal. When TCXSEL = 1 and TCXEN = 1, TCXOEN terminal becomes high output but when TCXSEL = 1 and TCXEN = 0,

© 2015 ROHM Co., Ltd. All rights reserved.

TCXOEN terminal becomes low output. Please set this register with OSCSEL= 1 to use an internal oscillator clock for measuring Analog Ping internal period.

- [7:6] Reserved
- [5:4] PWMD0, PWMD1: Setting bit for operation mode
  (0x0: Digital Ping mode 0x1: Analog Ping mode 0x2: Reserved 0x3: Stop mode)
- [3] Reserved
- [2] OSCSEL: Control bit for using internal oscillator
  (0x1: Enable 0x0: Disable)
- [1] TCXEN: Control bit for using external TCXO
  (0x1: Enable (High output) 0x0: Disable (Low output))
- [0] TCXSEL: Selection bit for using external TCXO
  (0x1: Enable 0x0: Disable)

Name	Address	b7	b6	b5	b4	b3	b2	b1	b0	Initial Value	R/W
PWRCTRL	0x0F	-*1	-*1	PWMD1	PWMD0	-*1	OSCSEL	TCXEN	TCXSEL	0x07	R/W

*1 prohibited

(7) PDCTRL: Control register for the pre-driver output
This register is used to enable pre-driver 1 and pre-driver 2. Pre-driver 1 drives HSIDE1 terminal and LSIDE1 terminal while pre-driver 2 drives HSIDE2 terminal and LSIDE2 terminal. When PDEN=1, the pulse is produced at HSIDE1 terminal and LSIDE1 terminal. When PDEN=0, the pulse is stopped. When PWM1EN=1, the pulse is produced at HSIDE2 terminal and LSIDE2 terminal. When PWM1EN=0, the pulse is stopped.
Refer to 3. FSK (Frequency Shift Keying) for the explanation of PSWEN and PS256.

- [7:5] Reserved
- [4] PWM1EN: Control bit for pre-driver 2
  (0x1: Enable 0x0: Disable)
- [3] Reserved
- [2] PS256: Change the PWM output to every 256 cycles
- [1] PSWEN: Control of the PWM change function
- [0] PDEN: Control bit for pre-driver 1
  (0x1: Enable 0x0: Disable)

Name	Address	b7	b6	b5	b4	b3	b2	b1	b0	Initial Value	R/W
PDCTRL0	0x12	-*1	-*1	-*1	PWM1 EN	-*1	PS256	PSWEN	PDEN	0x00	R/W

*1 prohibited

3. FSK (Frequency Shift Keying)

BD57020MWV transmits a packet to Rx using Frequency Shift Keying (FSK) to establish communication with Rx. When Tx transmits a packet using FSK, Tx changes the frequency of the PWM0 signal by pre-driver 1 into the drive frequency (fd) and the modulation frequency (fmod) every 256 periods. That drive frequency is the frequency of the PWM0 signal which set in 2.(1).That FSK modulation frequency is the frequency of the PWM0 signal which set in 3. The setting of FSK sets the following registers.

(1) PWMXPRD: Setting register for the period of the PWM0 signal at FSK
This register is used to set the period of PWM0 signal when PSWEN=1 (PDCTRL0: 0x12) and FSKIN terminal = high. The relation between the period of PWM0 signal and source clock is determined by the formula below, and it is expressed in the same formula as PWM0PRD.

$$PWMXPRD = round\left(\frac{SourceClock}{TargetClock}\right) - 1$$

Where “round” means rounding off to the nearest whole number.

Name	Address	b7	b6	b5	b4	b3	b2	b1	b0	Initial Value	R/W
PWMX PRDL	0x26	PWMX PRD7	PWMX PRD6	PWMX PRD5	PWMX PRD4	PWMX PRD3	PWMX PRD2	PWMX PRD1	PWMX PRD0	0x00	R/W
PWMX PRDH	0x27	PWMX PRD15	PWMX PRD14	PWMX PRD13	PWMX PRD12	PWMX PRD11	PWMX PRD10	PWMX PRD9	PWMX PRD8	0x00	R/W

(2) PWMXDTY: Setting register for the duty of the PWM0 signal at FSK
This register is used to set the duty of PWM0 signal when PSWEN=1 (PDCTRL0: 0x12) and FSKIN terminal = high. The

© 2015 ROHM Co., Ltd. All rights reserved.

relation between the duty of PWM0 signal and source clock is determined by the formula below, and it is expressed in a same formula as PWM0DTY.

$$PWMXDTY = int\left\{(PWMXPRD + 1) \times \left(\frac{Duty}{100}\right)\right\}$$

Where “int” means rounding down to the nearest whole number.

Name	Address	b7	b6	b5	b4	b3	b2	b1	b0	Initial Value	R/W
PWMX DTYL	0x28	PWMX DTY7	PWMX DTY6	PWMX DTY5	PWMX DTY4	PWMX DTY3	PWMX DTY2	PWMX DTY1	PWMX DTY0	0x00	R/W
PWMX DTYH	0x29	PWMX DTY15	PWMX DTY14	PWMX DTY13	PWMX DTY12	PWMX DTY11	PWMX DTY10	PWMX DTY9	PWMX DTY8	0x00	R/W

(3) PDCTRL: Control register for pre-driver output

This register is used to change the frequency of PWM0 signal by setting PSWEN and PS256. When PSWEN=1, the frequency and duty of PWM0 signal are changed by input signal of FSKIN terminal.

- When PSWEN = 0, the data of PWM0 signal is updated to the data of PWM0PRD and PWM0DTY.
- When of PSWEN = 1 and FSKIN terminal = Low, the data of PWM0 signal is updated to the data of PWM0PRD register and PWM0DTY register.
- When of PSWEN = 1 and FSKIN terminal = High, the data of PWM0 signal is updated to the data of PWMXPRD register and PWMXDTY register.

When PS256 is 1, the period and the duty of PWM0 are changed by input signal of FSKIN terminal every 256 cycles. After having taken in a change of external terminal FSKIN, during 256 cycles of the output frequency, the next change isn’t taken. Furthermore, an interrupt occurs every 256 cycles of the output frequency when PXIEN bit of register INTENB (0x04) is 1. Whenever an interrupt occurs, the output frequency from a pre-driver is changed by changing input of external terminal FSKIN every 256 cycles. Refer to 2.Digital Ping (7) PDCTRL for the explanation of bits.

Name	Address	b7	b6	b5	b4	b3	b2	b1	b0	Initial Value	R/W
PDCTRL0	0x12	-*1	-*1	-*1	PWM1 EN	-*1	PS256	PSWEN	PDEN	0x00	R/W

*1 prohibited

4. Analog Ping

BD57020MWV outputs pulse signal from primary coil to detect if Rx was put on the interface of the Tx. The presence of Rx is confirmed if BD57020MWV detects a change in the coil current or voltage. When the change of the coil current or voltage reaches the threshold value of the Analog Ping detection, the state shifts to Digital Ping. Additionally, BD57020MWV will generate an interrupt after Analog Ping executes a set number of times. In Analog Ping, it is necessary to drive a primary coil near the resonant frequency. The setting of the frequency is performed right before an output of Analog Ping, like Digital Ping. Set the following registers to configure Analog Ping.

(1) APGCTRL: Control register for Analog Ping

This register is used to set the start and stop of Analog Ping and the expected value of Rx detection by Analog Ping. BD57020MWV starts Analog Ping when APEN=1 is set. The period and duty of PWM0 should be set before APEN is set to 1. BD57020MWV stops Analog Ping when APEN=0 is set. When the state of the COIL_IN terminal is matched with the expected value of this register, BD57020MWV detects Rx. When APEN is 1, BD57020MWV becomes the stand-by state, the circuit electric current decreases.BD57020MWV will execute Analog ping until any of the two conditions is met: 1.) Analog Ping finishes the set number of repeated execution without detecting any Rx. 2.) Rx is detected wherein it generates an interrupt and stops Analog Ping. The expected value of Analog Ping is configured as follows:

- [7] APEN: Control bit for Analog Ping
  (0x1: Enable 0x0 : Disable)
- [6:2] Reserved
- [1:0] APEX0, APEX1: Expected value of Analog ping
  (0x1: Detect the Rx 0x0: Not detect the Rx 0x2, 0x3: Reserved)

Name	Address	b7	b6	b5	b4	b3	b2	b1	b0	Initial Value	R/W
APGCTRL	0x16	APEN	-*1	-*1	-*1	-*1	-*1	APEX1	APEX0	0x00	R/W

*1 prohibited

© 2015 ROHM Co., Ltd. All rights reserved.

(2) APGSTT: Analog Ping status register

This register shows status of Analog Ping.

- [7] Reserved
- [6:4] APSTA2, APSTA1, APSTA0: Analog Ping status
  - 0x0: Stop
  - 0x1: Under the standby set in APGIVT
  - 0x3: Under the power output set in APGIDUR
  - 0x5: Under the measurement set in APGMSR
  - 0x6: A state of the input accorded with a value of the APEX. BD57020MWV generates an interrupt and stop.
  - 0x7: The number of Analog Ping cycles reaches the set number. BD57020MWV generates an interrupt and stop.
  - Others: Reserved
- [3:0] Reserved

Name	Address	b7	b6	b5	b4	b3	b2	b1	b0	Initial Value	R/W
APGSTT	0x17	- *1	APSTA2	APSTA1	APSTA0	- *1	- *1	- *1	- *1	0x00	R/W

*1 prohibited

(3) APGITVL: Setting register for the interval time of Analog Ping

This register is used to set the interval time of Analog Ping. If The Analog Ping detection interval is set short, time from Rx establishment on Tx to Tx starting power feeding is short. However, the power consumption of Tx increases The Analog Ping detection interval is set by interval with internal oscillation clock (typ.100kHz). The relation between the interval time and input clock is determined by the following formula:

$$APGITV = (IntervalTime \times InputClock) - 1$$

For example, if Input Clock=100kHz and time of Interval Time=500msec, the value of APGITV register is set to the following value:

$$APGITV = (500 \times 100) - 1 = 49999 = 0\text{xC34F}$$

Name	Address	b7	b6	b5	b4	b3	b2	b1	b0	Initial Value	R/W
APGITVL	0x18	APG ITV7	APG ITV6	APG ITV5	APG ITV4	APG ITV3	APG ITV2	APG ITV1	APG ITV0	0x00	R/W
APGITVH	0x19	APG ITV15	APG ITV14	APG ITV13	APG ITV12	APG ITV11	APG ITV10	APG ITV9	APG ITV8	0x00	R/W

(4) APGDUR: Setting register for the duration time of Analog Ping

This register is used to set the duration time of Analog Ping. Duration time is defined as the time frame wherein BD57020MWV produces the pulse output and drives the primary coil. The input clock from TCXOIN terminal is a source clock. The relation between the duration time and source clock is determined by the following formula:

$$APGDUR = int\left\{DurationTime \times SourceClock \times \left(\frac{1}{1000}\right)\right\} - 1$$

Where “int” means rounding down to the nearest whole number.

For example, if the time of duration is 100µsec and Source Clock is 32MHz, the value of APGDUR register is set to the following value:

$$APGDUR = int\left\{100 \times 32000 \times \left(\frac{1}{1000}\right)\right\} - 1 = 3199 = 0\text{x0C7F}$$

Name	Address	b7	b6	b5	b4	b3	b2	b1	b0	Initial Value	R/W
APGDURL	0x1A	APG DUR7	APG DUR6	APG DUR5	APG DUR4	APG DUR3	APG DUR2	APG DUR1	APG DUR0	0x00	R/W
APGDURH	0x1B	- *1	- *1	- *1	- *1	APG DUR11	APG DUR9	APG DUR8	APG DUR7	0x00	R/W

*1 prohibited

© 2015 ROHM Co., Ltd. All rights reserved.

(5) APGMSR: Setting register for the measurement time of Analog Ping

This register is used to set the measurement time of Analog Ping. Measurement time is defined as the time frame after the duration time wherein BD57020MWV monitors the state of COIL_IN to confirm the presence of Rx. The input clock from TCXOIN terminal is a source clock. The relation between the measurement time and source clock is determined by the following formula:

$$APGMSR = int\left\{MeasurementTime \times SourceClock \times \left(\frac{1}{1000}\right)\right\} - 1$$

Where “int” means rounding down to the nearest whole number.

For example, if Measurement Time=10µsec and Source Clock is 32MHz, APGMSR register is set to the following value:

$$APGMSR = int\left\{10 \times 32000 \times \left(\frac{1}{1000}\right)\right\} - 1 = 319 = 0x013F$$

Name	Address	b7	b6	b5	b4	b3	b2	b1	b0	Initial Value	R/W
APGMSRL	0x1C	APG MSR7	APG MSR6	APG MSR5	APG MSR4	APG MSR3	APG MSR2	APG MSR1	APG MSR0	0x00	R/W
APGMSRH	0x1D	-*1	-*1	-*1	-*1	APGMS R11	APGMS R10	APGMS R9	APGMS R8	0x00	R/W

*1 prohibited

(6) APGCNT: Setting register for the execution number of times of Analog Ping

This register is used to set the number of times Analog Ping carries out automatically. If APGCNT= 0, Analog Ping is carried out until APEN bit of APGCTRL register is 0. If APIEN=1 in the INTENB register, when the number of Analog Ping execution times reaches the set number, BD57020MWV generates an interrupt signal. BD57020MWV keeps generating an interrupt signal until APEN bit of APGCTRL register is 0.

Name	Address	b7	b6	b5	b4	b3	b2	b1	b0	Initial Value	R/W
APGCNT	0x1E	APG CNT7	APG CNT6	APG CNT5	APG CNT4	APG CNT3	APG CNT2	APG CNT1	APG CNT0	0x00	R/W

5. Interrupt control

BD57020MWV generates various interrupt signals. These are configured by the following registers.

(1) INTSTT: Interrupt status register

This register shows an interrupt status when an interrupt factor occurred. When any bit of this register is set, BD57020MWV generates an interrupt signal on INTB terminal. When the bit is set to 1, the interrupt signal is cleared.

- [7] Reserved
- [6] APINT: An interrupt signal of Analog Ping occurs.
- [5] Reserved
- [4] AGINT: An interrupt signal by the protection movement occurs.
- [3] EINT: An interrupt signal due to the parity error or the framing error of the received packet.
- [2] CINT: An interrupt signal due to the check sum error of the received packet.
- [1] RINT2: An interrupt signal due to the normal completion of reception by demodulator 2.
- [0] RINT1: An interrupt signal due to the normal completion of reception by demodulator 1.

Name	Address	b7	b6	b5	b4	b3	b2	b1	b0	Initial Value	R/W
INTSTT	0x03	-*1	APINT	-*1	AGINT	EINT	CINT	RINT2	RINT1	0x00	R/W

*1 prohibited

(2) INTENB: Control register for an interrupt

This register is used to control an interrupt signal. When the interrupt factor that is set to 1 by this register occurred, a bit to support of the interrupt status register is set. But there is no bit of the interrupt status register (INTSTT) corresponding to PXIEN of the interrupt enable register (INTENB). Because the admitted interrupt occurs in 1 pulse by PXIEN, the status at the time of the outbreak of interrupt is not maintained.

- [7] PXIEN: Control bit for an interrupt signal every 256 cycles by PWM change function
- [6] APINT: Control bit for an interrupt signal in Analog Ping
- [5] Reserved
- [4] AGINT: Control bit for an interrupt signal by protection movement
- [3] EINT: Control bit for an interrupt signal by the parity error or the framing error during the packet reception

© 2015 ROHM Co., Ltd. All rights reserved.

・[2] CINT: Control bit for an interrupt signal by the check sum error during the packet reception
・[1] RINT2: Control bit for an interrupt signal by normal completion at demodulator 2 during the packet reception
・[0] RINT1: Control bit for an interrupt signal by normal completion at demodulator 1 during the packet reception

Name	Address	b7	b6	b5	b4	b3	b2	b1	b0	Initial Value	R/W
INTENB	0x04	PXIEN	APIEN	-*1	AGIEN	EIEN	CIEN	RIEN2	RIEN1	0x00	R/W

*1 prohibited

6. AM demodulator block

BD57020MWV has the two AM demodulator blocks for communication with Rx. The characteristics of demodulator blocks are different to improve communication stability. The following registers are used for the configuration of the demodulator blocks.

(1) RXCTRL: Control register for Packet reception

This register is used to control the demodulating blocks. If PRE1 bit=1, the demodulator 1 is enabled to receive the packets. If PRE2 bit=1, the demodulator 2 is enabled to receive the packets. It is possible to set both PRE1 bit and PRE2 bit to 1 at the same time, then demodulator 1 and demodulator 2 works independently. The digital filters of the demodulators are enabled if FTE1 bit and FTE2 bit are set to 1 in this register. In order to raise communication stability, please be sure that the digital filters are enabled.

If other demodulator is receiving a packet even if reception error (frame error, parity error or check sum error) occurs in demodulator 1 or demodulator 2 while CTRL is 0, it does not generate an interrupt.

If CTRL bit = 1 and a reception error occurs on demodulator 1 or demodulator 2, BD57020MWV generates an interrupt signal immediately.

・[7] CTRL: Setting bit of exclusive control function
(0x1: Enable 0x0: Disable)
・[6] Reserved
・[5] FTE2: Setting bit for the digital filter of the demodulator 2
(0x1: Enable 0x0: Disable)
・[4] FTE1: Setting bit for the digital filter of the demodulator 1
(0x1: Enable 0x0: Disable)
・[3:2] Reserved
・[1] PRE2: Setting bit for the demodulator 2
(0x1: Enable 0x0: Disable)
・[0] PRE1: Setting bit for the demodulator 1
(0x1: Enable 0x0: Disable)

Name	Address	b7	b6	b5	b4	b3	b2	b1	b0	Initial Value	R/W
RXCTRL	0x01	CTRL	-*1	FTE2	FTE1	-*1	-*1	PRE2	PRE1	0x00	R/W

*1 prohibited

(2) RXSTT: Packet reception status register

This register holds the status of the packet reception of the demodulator. If packet reception with demodulator 1 is completed normally, RCV1 becomes 1. If packet reception with demodulator 2 is completed normally, RCV2 becomes 1. If check sum error occurs during the packet reception with demodulator 1 or demodulator 2, CERR becomes 1. If parity error or framing error occurs during the packet reception with demodulator 1 or demodulator 2, PERR becomes 1.

The factors of the framing error during packet reception are as follows:

・Stop bit is not found.
・Reception was completed in the middle of a byte.
・The packet size that is calculated from the value of the header byte is different from the one that is received.

In addition, RCV1, RCV2, CERR and RERR, latch when packet reception is completed. These are cleared if RINT1, RINT2, CINT and RINT (INTSTT: 0x03) are written 1.These are overwritten when the next packet is received.

When demodulator 1 is receiving packet, BSY1 becomes 1. When demodulator 2 is receiving packet, BSY2 becomes 1.

・[7] BSY2: Demodulator 2 is busy receiving a packet
・[6] BSY1: Demodulator 1 is busy receiving a packet
・[5:4] Reserved
・[3] PERR: Parity error or framing error occurred during the packet reception with either demodulator 1 or demodulator 2
・[2] CERR: Check sum error occurred during the packet reception with either demodulator 1 or demodulator 2
・[1] RCV2: Packet reception is completed normally with demodulator 2.
・[0] RCV1: Packet reception is completed normally with demodulator 1.

© 2015 ROHM Co., Ltd. All rights reserved.

Name	Address	b7	b6	b5	b4	b3	b2	b1	b0	Initial Value	R/W
RXSTT	0x02	BSY2	BSY1	-*1	-*1	RERR	CERR	RCV2	RCV1	0x00	R

*1 prohibited

(3) CLKDIV: Register for setting Clock frequency division

This register sets the fundamental period of the demodulator. This set the fundamental period (CLKDIV) with a count level. The value of CLKDIV must be set so that *Target Clock* becomes 16kHz (62.5µsec). CLKDIV is determined by the following formula:

$$CLKDIV = int\left(\frac{SourceClock}{TargetClock \times 2}\right) - 1$$

Where “int” means rounding down to the nearest whole number.
For example, if Source Clock is 32MHz, CLKDIV set to the following value:

$$CLKDIV = int\left(\frac{32000}{16 \times 2}\right) - 1 = 999 = 0\text{x}03\text{E}7$$

Name	Address	b7	b6	b5	b4	b3	b2	b1	b0	Initial Value	R/W
CLKDIV1L	0x0C	CLK DIV7	CLK DIV6	CLK DIV5	CLK DIV4	CLK DIV3	CLK DIV2	CLK DIV1	CLK DIV0	0xE7	R/W
CLKDIV1H	0x0D	CLK DIV15	CLK DIV14	CLK DIV13	CLK DIV12	CLK DIV11	CLK DIV10	CLK DIV9	CLK DIV8	0x03	R/W

(4) FLTPRD: Register for setting filter fundamental period

This register appoints the fundamental period of the digital filter. This set the fundamental period (FLTPRD) with a count level. The value of CLKDIV must be set so that *Target Clock* becomes 2kHz (500µsec). FLTPRD is determined by the following formula:

$$FLTPRD = round\left(\frac{SourceClock}{TargetClock}\right) - 1$$

Where “round” means rounding off to the nearest whole number.

For example, when Source Clock is 32MHz, CLKDIV is set to the following value:

$$FLTPRD = round\left(\frac{32000}{2}\right) - 1 = 15999 = 0\text{x}3\text{E}7\text{F}$$

Name	Address	b7	b6	b5	b4	b3	b2	b1	b0	Initial Value	R/W
FLTPRDL	0xA0	FLT PRD7	FLT PRD6	FLT PRD5	FLT PRD4	FLT PRD3	FLT PRD2	FLT PRD1	FLT PRD0	0x00	R/W
FLTPRDH	0xA1	FLT PRD15	FLT PRD14	FLT PRD13	FLT PRD12	FLT PRD11	FLT PRD10	FLT PRD9	FLT PRD8	0x00	R/W

(5) RXSTT_1: Packet reception status register 1

This register shows the packet reception status of demodulator 1.

- [7] PRE1: In searching the preamble of the packet with demodulator 1
- [6] BSY1: In receiving a packet with demodulator 1
- [5] RDN1:Packet reception is completed with demodulator 1
- [4] ERF1:Framing error occurs during the packet reception with demodulator 1
- [3] ERP1:Parity error occurs during the packet reception with demodulator 1
- [2] ERC1:Check sum error occurs during the packet reception with demodulator 1
- [1] RCV2:Packet reception is completed with demodulator 2 normally
- [0] RCV1:Packet reception is completed with demodulator 1 normally

Name	Address	b7	b6	b5	b4	b3	b2	b1	b0	Initial Value	R/W
RXSTT_1	0x52	PRE1	BSY1	RDN1	ERF1	ERP1	ERC1	RCV2	RCV1	0x00	R

© 2015 ROHM Co., Ltd. All rights reserved.

(6) RXSTT_2: Packet reception status register 2
This register shows the packet reception status of demodulator 2.
- [7] PRE2: In searching the preamble of the packet with demodulator 2
- [6] BSY2: In receiving a packet with demodulator 2
- [5] RDN2:Packet reception is completed with demodulator 2
- [4] ERF2:Framing error occurs during the packet reception with demodulator 2
- [3] ERP2:Parity error occurs during the packet reception with demodulator 2
- [2] ERC2:Check sum error occurs during the packet reception with demodulator 2
- [1] RCV1:Packet reception is completed with demodulator 1 normally
- [0] RCV2:Packet reception is completed with demodulator 2 normally

Name	Address	b7	b6	b5	b4	b3	b2	b1	b0	Initial Value	R/W
RXSTT_2	0x53	PRE2	BSY2	RDN2	ERF2	ERP2	ERC2	RCV1	RCV2	0x00	R

(7) RXCNT_X: Reports the Rx byte counter
This register reports the total number of bytes received from demodulator 1 or 2.
- [7:5] Reserved
- [4] RXxCNT4 (x: 0, 1)
- [3] RXxCNT3 (x: 0, 1)
- [2] RXxCNT2 (x: 0, 1)
- [1] RXxCNT1 (x: 0, 1)
- [0] RXxCNT0 (x: 0, 1)

Name	Address	b7	b6	b5	b4	b3	b2	b1	b0	Initial Value	R/W
RXCNT_1	0x50	-*1	-*1	-*1	RX1 CNT4	RX1 CNT3	RX1 CNT2	RX1 CNT1	RX1 CNT0	0x00	R
RXCNT_2	0x51	-*1	-*1	-*1	RX2 CNT4	RX2 CNT3	RX2 CNT2	RX2 CNT1	RX2 CNT0	0x00	R

*1 prohibited

(8) RXDAT_1: Packet data register 1
This enables to show the data of the packet that is received with demodulator 1. Size of the buffers receiving Qi packet is 32 bytes. The longest packet prescribed in Qi is 29 bytes (including a header and the check sum byte). So BD57020MWV receive the packet of all kinds. The buffer to receive Qi packet is one to be 32 bytes, and the packet that is received is stored by the top of the buffer memory and is overwritten when BD57020MWV receive the next packet.

Name	Address	b7	b6	b5	b4	b3	b2	b1	b0	Initial Value	R/W
RXDAT_1	0x60 : 0x7F	Last 32 Bytes received by Demodulator 1								0x00	R

(9) RXDAT_2: Packet data register 2
This enables to show the data of the packet that is received with demodulator 2. Size of the buffers receiving Qi packet is 32 bytes. The buffer to receive Qi packet is one to be 32 bytes, and the packet that is received is stored by the top of the buffer memory and is overwritten when BD57020MWV receive the next packet.

Name	Address	b7	b6	b5	b4	b3	b2	b1	b0	Initial Value	R/W
RXDAT_2	0x80 : 0x9F	Last 32 Bytes received by Demodulator 2								0x00	R

7. About the input power detection

During wireless power transmission, when a foreign object such as a piece of metal exists on the charge interface between Tx and Rx, it generates heat, which poses a risk to cause burns and may even damage the Rx. BD57020MWV monitors the input power to the Tx and finds transmission electricity and detects the existence of the foreign object by comparing the transmission electricity with the received power electricity information (Received Power Packet) from Rx. BD57020MWV calculates the input power by monitoring the input voltage and the input current of the Tx.
About the input voltage (ADPV terminal voltage) detection, BD57020MWV can output the voltage of ADPV terminal voltage ×0.1 from MONI1 terminal by the following register setting. In addition, it uses an external current detection amplifier about the input current detection. From them, the transmission electricity is calculated.

(1) AINSEL: Analog input choice register
By this register, MONI1 terminal outputs the voltage of ADPV terminal voltage ×0.1.

© 2015 ROHM Co., Ltd. All rights reserved.

・[7:2] Reserved
・[1] AIN1SEL1
(0x1： ADPV terminal voltage)
・[0] Reserved

Name	Address	b7	b6	b5	b4	b3	b2	b1	b0	Initial Value	R/W
AINSEL	0x08	-*1	-*1	-*1	-*1	-*1	-*1	AIN1 SEL1	-*1	0x00	R/W

*1 prohibited

8. Low Drop OUT (LDO) block

BD57020MWV is equipped with two LDO blocks. On LDO33A terminal, it is assumed that the power supply of the microcomputer is connected. Capacitors (0.47 ~ 2.0µF) are necessary between the LDO terminals (LDO33A and LDO33B) and GND. Please place the capacitors as close to LDO33A and LDO33B terminals as possible.

9. About a general-purpose terminal (GPIO)

BD57020MWV has four GPIO terminals as a general-purpose terminal. The following registers are used to configure the GPIO terminals.

(1) GPDIR: Input and output direction setting register of the GPIO port
This register sets each GPIO port as an input terminal or output terminal. If set to 1, the port becomes an output terminal. On the other hand, if set to 0, the port becomes an input terminal.
・[7:4] Reserved
・[3:0] PDX (X: 0- 3)
(0x1: Enable output on GPIOX 0x0：Enable input on GPIOX)

Name	Address	b7	b6	b5	b4	b3	b2	b1	b0	Initial Value	R/W
GPDIR	0x42	-*1	-*1	-*1	-*1	PD3	PD2	PD1	PD0	0x00	R/W

*1 prohibited

(2) GPIN: Input state confirmation register of the GPIO terminal
This register defines the state of the GPIO port. Only the bit set as an input port in the input and output direction setting registers of the GPIO port is enabled. When H is input into the port, the corresponded register becomes 1. When L was input into the port, the corresponded register becomes 0.
・[7:4] Reserved
・[3:0] PIX (X: 0- 3)
(0x1: High input on GPIOX 0x0：Low input on GPIOX)

Name	Address	b7	b6	b5	b4	b3	b2	b1	b0	Initial Value	R/W
GPIN	0x40	-*1	-*1	-*1	-*1	PI3	PI2	PI1	PI0	-	R

*1 prohibited

(3) GPOUT: Output setting register of the GPIO terminal
This register sets an output level to the GPIO port. Only the bit set as an output port in the input and output direction setting registers of the GPIO port is enabled. When the register is 1, the corresponded port outputs H. When the register is 0, the corresponded port outputs L.
・[7:4] Reserved
・[3:0] POX (X: 0- 3)
(0x1: High output on GPIOX 0x0：Low output on GPIOX)

Name	Address	b7	b6	b5	b4	b3	b2	b1	b0	Initial Value	R/W
GPOUT	0x41	-*1	-*1	-*1	-*1	PO3	PO2	PO1	PO0	0x00	R/W

*1 prohibited

© 2015 ROHM Co., Ltd. All rights reserved.

(4) GPPU: The pull-up resistance of GPIO port setting register
This register sets the pull-up resistance of each GPIO port. If set to 1, the resistance connected to VDD power supply is enabled. If set to 0, it is disabled.

・[7:4] Reserved
・[3:0] PPUX (X: 0- 3)
(0x1: Enable pull-up resistor on GPIOX 0x0：Disable)

Name	Address	b7	b6	b5	b4	b3	b2	b1	b0	Initial Value	R/W
GPPU	0x43	-*1	-*1	-*1	-*1	PPU3	PPU2	PPU1	PPU0	0x00	R/W

*1 prohibited

(5) GPPD: The pull-down resistance of GPIO port setting register
This register sets the pull-down resistance of each GPIO port. If set to 1, the resistance connected to GND is enabled. If set to 0, it is disabled. The initial value of this register is 0x0F, and the pull-down resistance is enabled.

・[7:4] Reserved
・[3:0] PPDX (X: 0- 3)
(0x1: Enable pull-down resistor on GPIOX 0x0：Disable)

Name	Address	b7	b6	b5	b4	b3	b2	b1	b0	Initial Value	R/W
GPPD	0x44	-*1	-*1	-*1	-*1	PPD3	PPD2	PPD1	PPD0	0x0F	R/W

*1 prohibited

10. Reporting the identify

BD57020MWV has a register to report its identify and version. These are read only.

Name	Address	b7	b6	b5	b4	b3	b2	b1	b0	Initial Value	R/W
IDENT	0x00	DID7	DID6	DID5	DID4	DID3	DID2	DID1	DID0	0x21	R

© 2015 ROHM Co., Ltd. All rights reserved.

11. Protective circuit

BD57020MWV has the following functions as a protection feature.

Protection name	Detection terminal	Detection condition	Release condition	Protection type
OVLO_VIN	VIN	VIN > 6.4V	VIN <6.2V	System disabled
UVLO_VIN	VIN	VIN <3.4V	VIN > 3.6V	System disabled
Internal OCP	VIN	ICC > IOCP = 0.48A	ICC <IOCP = 0.48A	System disabled
External OCP	ADPV ADPI	ADPV - ADPI > VOCP = 160mV	ADPV - ADPI <160mV And Register (Note 1) 0xB1 = 0x08 *	Pre-driver block stop The LSIDE = HSIDE = L output
UVLO_ADPV	ADPV	VIN <4.3V	VIN > 4.5V	Pre-driver block stop (Note 2) LSIDE = H, HSIDE = L
UVLO_VDD	VDD	VDD <2.5V	VDD > 2.8V	Power-on reset cancellation RESETB = L
UVLO_VDDIO	VDDIO	VDDIO <2.5V	VDDIO > 2.8V	IO block Disable

(Note1) It is necessary to reset it from a register to cancel external overcurrent protection. It can reset external overcurrent protection by writing in 0x08 at address 0xB1. However, please set 0 by all means because this register does not automatically return to 0 after setting it to 0x08.
(Note2) BD57020MWV can mask the pre-driver block stop even if it detects UVLO_ADPV depending on the register setting.

(1) ANA_STAT: Status register for internal blocks
This register reports the status for internal blocks.

- [7:5] Reserved
- [4] TCX_READY
  (0x1: Fault detected 0x0 : No fault)
- [3] OCP
  (0x1: Fault detected 0x0 : No fault)
- [2] TSD
  (0x1: Fault detected 0x0 : No fault)
- [1] UVLO42
  (0x1: Fault detected 0x0 : No fault)
- [0] OVLO_VIN
  (0x1: Fault detected 0x0 : No fault)

Name	Address	b7	b6	b5	b4	b3	b2	b1	b0	Initial Value	R/W
ANA_STAT	0xB0	-*1	-*1	-*1	TCX_READY	OCP	TSD	UVLO	OVLO	0x00	R

*1 prohibited

(2) ANA_ERR_CRL: OCP error configure register
This register configures the reset for OCP. If OCP_ERCL is set to 1, the OCP error is cleared. However, please set 0 by all means because this bit does not automatically return to 0 after setting it to 1.

Name	Address	b7	b6	b5	b4	b3	b2	b1	b0	Initial Value	R/W
ANN_ERR_CRL	0xB1	-*1	-*1	-*1	-*1	OCP ERCL	-*1	-*1	-*1	0x00	R/W

*1 prohibited

(3) ERR_MODE: Error mode setting register in UVLO_ADPV
This register configures the error mode in UVLO_ADPV. If ERR_SEL = 1, the pre-driver block works regardless of UVLO_ADPV. If ERR_SEL = 0, the pre-driver block stops if it detects UVLO_ADPV.

Name	Address	b7	b6	b5	b4	b3	b2	b1	b0	Initial Value	R/W
ERR_MODE	0xC4	-*1	-*1	-*1	-*1	-*1	-*1	ERR_SEL	-*1	0x00	R/W

*prohibited

© 2015 ROHM Co., Ltd. All rights reserved.

About External OCP movement

BD57020MWV monitors the input current to the Tx. If there is an excessive flow of electric current, it will stop the operation of the pre-driver block. Then, LSIDE1 (LSIDE2) terminal and the HSIDE1 (HSIDE2) terminal become the L output.
The relation of current limit I_{LIM} and the current sense resistor R_S, is determined by the following formula:

$$I_{LIM} = \frac{V_{OCP}}{R_S}[A]$$

Where V_{OCP} is the OCP detecting voltage.

For example, I_{LIM} becomes 1.6A if RS=100mΩ and VOCP=160mV (typ). The value of R_S is between 30 ~ 47mΩ when Adapter Voltage is 5V. And the value of R_S is between 30 ~ 100mΩ when Adapter Voltage is 12V or 19V. Please be careful enough on the occasion of the value setting with the set.

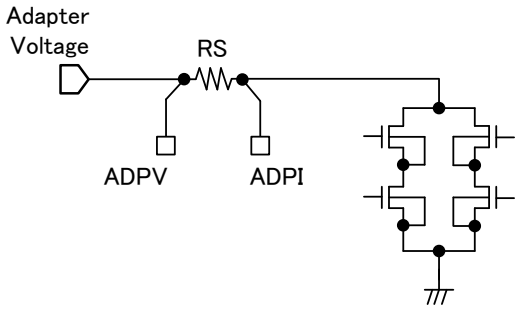

Figure 5. The input current detection

© 2015 ROHM Co., Ltd. All rights reserved.

12. Command interface

12-1.Command Interface

I2C bus method is used in command interface with host CPU on BD57020MWV.
In BD57020MWV, not only writing but read-out is possible except for some registers.
Besides the slave address in BD57020MWV, one byte select address can be Specified, written and readout.
The format of I2C bus slave mode is shown below.
The slave address of BD57020MWV is 0x44 (7Bit) while ADDR terminal input is L. It is 0x45 (7Bit) while ADDR terminal input is H.

	MSB LSB		MSB LSB		MSB LSB		
S	Slave Address	A	Select Address	A	Data	A	P

S: Start condition
Slave Address: Putting up the bit of read mode (H") or write mode (L") after slave address (7bit) set with ADDR, the data of eight bits in total will be sent. (MSB first)
A: The acknowledge bit in each byte adds into the data when acknowledge is sent and received. When data is correctly sent and received, "L" will be sent and received. There was no acknowledging for "H".
Select Address: 1 byte select address is used in BD57020MWV. (MSB first)
Data: Data byte, data (the MSB first) sent and received
P: Stop Condition

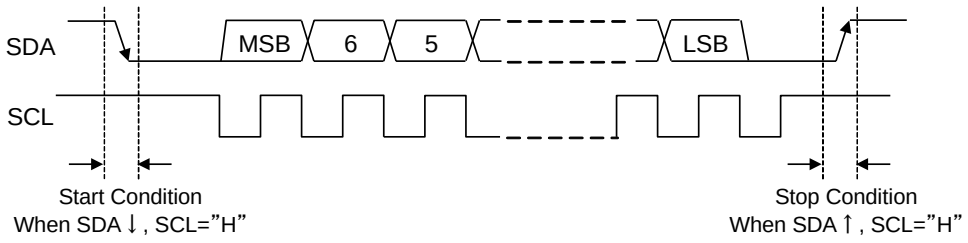

Figure 6. Command Interface

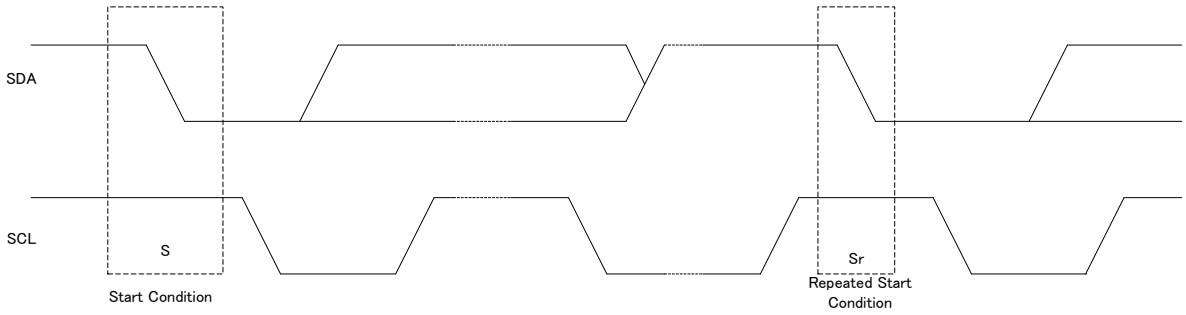

Figure 7. Repeated Start Condition

© 2015 ROHM Co., Ltd. All rights reserved.

12-2.Data Format

Write format

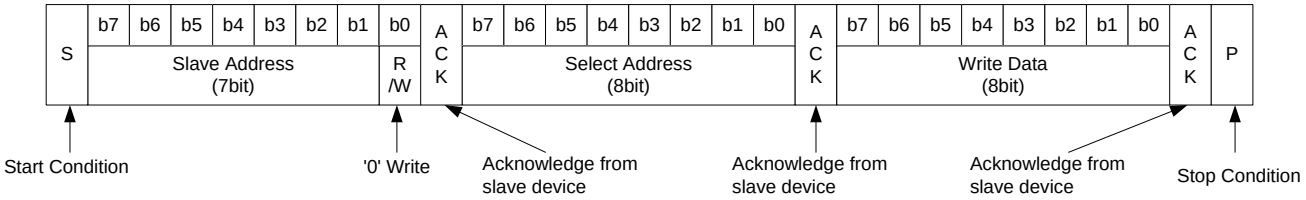

Figure 8. Write Data Format

Read format

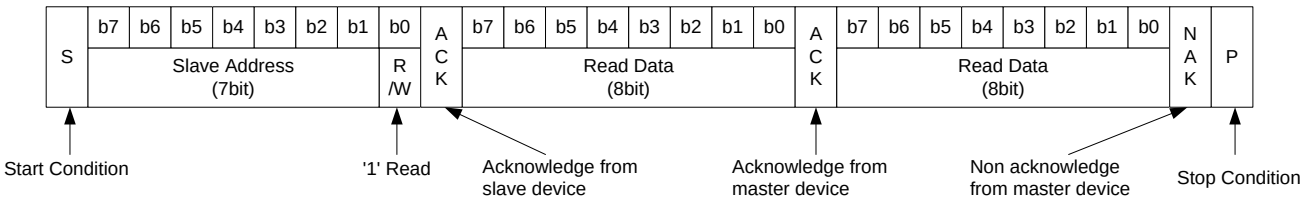

Figure 9. Read Data Format

Read Data from specified Select Address

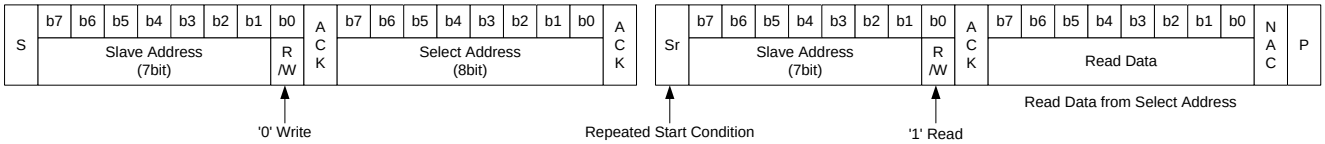

Figure 10. Read Data from specified Select Address (1)

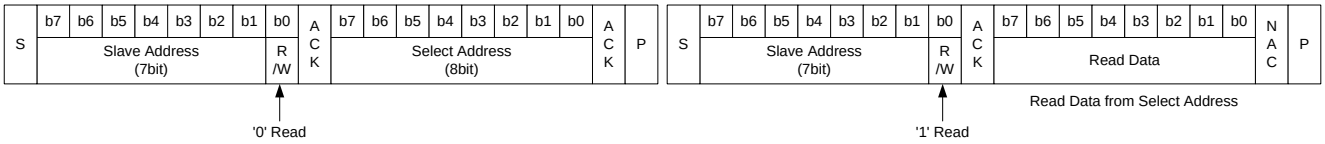

Figure 11. Read Data from specified Select Address (2)

© 2015 ROHM Co., Ltd. All rights reserved.

12-3.Control signal specifications

○Bus line, I/O stage electrical specification and timing

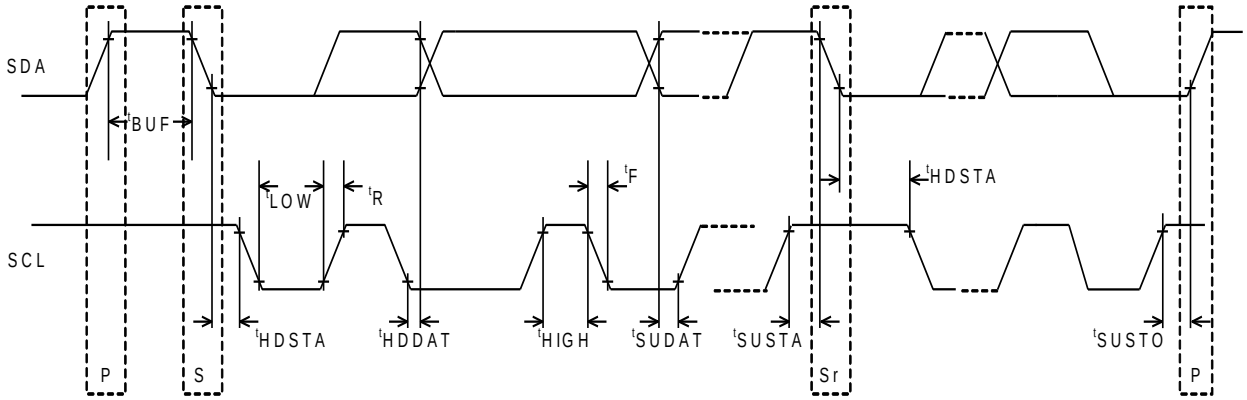

Figure 12. Timing chart

Table 12-1. SDAI and SCLI bus-line characteristic (Unless specified, Ta = 25 degrees Celsius, VDD=3.3V)

Parameter		Sign	Draft mode		Unit
			Min.	Max.	
1	SCL clock frequency	f_{SCL}	0	400	kHz
2	Bus free time between a "stop" condition and "start" conditions	t_{BUF}	1.3	—	μs
3	It is a "start" condition (retransmission) in hold time. After this period, The first clock pulse is generated.	t_{HDSTA}	0.6	—	μs
4	LOW state hold time of the SCL clock	t_{LOW}	1.3	—	μs
5	HIGH state hold time of the SCL clock	t_{HIGH}	0.6	—	μs
6	Setup time of the retransmission "start" condition	t_{SUSTA}	0.6	—	μs
7	Data hold time	t_{HDDAT}	0 Note1)	—	μs
8	Data setup time	t_{SUDAT}	100	—	ns
9	Rise time of SDA and the SCL traffic light	t_R	20+0.1Cb	300	ns
10	Fall time for SDA and SCL signaling	tF	20+0.1Cb	300	ns
11	Setup time of the "stop" condition	t_{SUSTO}	0.6	—	μs
12	Capacitive load of each bus line	C_b	—	400	pF

The above-mentioned numerical values are all the values corresponding to VIH min and VIL max level.

Note1) To exceed an undefined area on falling edged of SCLI, transmission device should internally offer the hold-time of 300ns or more for SDAI signal (VIH min of SCLI signal).

The above-mentioned characteristic is a theory value in IC design and it doesn't be guaranteed by shipment inspection. When problem occurs by any chance, we talk in good faith and correspond.

© 2015 ROHM Co., Ltd. All rights reserved.

12-4.List of registers

Name	Address	b7	b6	b5	b4	b3	b2	b1	b0	Initial Value	R/W
IDENT	0x00	DID7	DID6	DID5	DID4	DID3	DID2	DID1	DID0	0x21	R
RXCTRL	0x01	CTRL	-*1	FTE2	FTE1	-*1	-*1	PRE2	PRE1	0x00	R/W
RXSTT	0x02	BSY2	BSY1	-*1	-*1	RERR	CERR	RCV2	RCV1	0x00	R
INTSTT	0x03	-*1	APINT	-*1	AGINT	RINT	CINT	RINT2	RINT1	0x00	R/W
INTENB	0x04	PXIEN	APIEN	-*1	AGIEN	RIEN	CIEN	RIEN2	RIEN1	0x00	R/W
Reserved	0x05 : 0x07	-*1	-*1	-*1	-*1	-*1	-*1	-*1	-*1	-	-*1
AINSEL	0x08	-*1	-*1	-*1	-*1	-*1	-*1	AIN1 SEL1	-*1	0x00	R/W
Reserved	0x09 : 0x0B	-*1	-*1	-*1	-*1	-*1	-*1	-*1	-*1	-	-*1
CLKDIV1L	0x0C	CLK DIV7	CLK DIV6	CLK DIV5	CLK DIV4	CLK DIV3	CLK DIV2	CLK DIV1	CLK DIV0	0xE7	R/W
CLKDIV1H	0x0D	CLK DIV15	CLK DIV14	CLK DIV13	CLK DIV12	CLK DIV11	CLK DIV10	CLK DIV9	CLK DIV8	0x03	R/W
Reserved	0x0E	-*1	-*1	-*1	-*1	-*1	-*1	-*1	-*1	-	-*1
PWRCTRL	0x0F	-*1	-*1	PWMD1	PWMD0	-*1	OSCSEL	TCXEN	TCXSEL	0x07	R/W
Reserved	0x10 : 0x11	-*1	-*1	-*1	-*1	-*1	-*1	-*1	-*1	-	-*1
PDCTRL0	0x12	-*1	-*1	-*1	PWM1 EN	-*1	PS256	PSWEN	PDEN	0x00	R/W
Reserved	0x13 : 0x15	-*1	-*1	-*1	-*1	-*1	-*1	-*1	-*1	-	-*1
APGCTRL	0x16	APEN	-*1	-*1	-*1	-*1	-*1	APEX1	APEX0	0x00	R/W
APGSTT	0x17	-*1	APSTA2	APSTA1	APSTA0	-*1	-*1	-*1	-*1	0x00	R/W
APGITVL	0x18	APG ITV7	APG ITV6	APG ITV5	APG ITV4	APG ITV3	APG ITV2	APG ITV1	APG ITV0	0x00	R/W
APGITVH	0x19	APG ITV15	APG ITV14	APG ITV13	APG ITV12	APG ITV11	APG ITV10	APG ITV9	APG ITV8	0x00	R/W
APGDURL	0x1A	APG DUR7	APG DUR6	APG DUR5	APG DUR4	APG DUR3	APG DUR2	APG DUR1	APG DUR0	0x00	R/W
APGDURH	0x1B	-*1	-*1	-*1	-*1	APG DUR11	APG DUR9	APG DUR8	APG DUR7	0x00	R/W
APGMSRL	0x1C	APG MSR7	APG MSR6	APG MSR5	APG MSR4	APG MSR3	APG MSR2	APG MSR1	APG MSR0	0x00	R/W
APGMSRH	0x1D	APGMS R15	APGMS R14	APGMS R13	APGMS R12	APGMS R11	APGMS R10	APGMS R9	APGMS R8	0x00	R/W
APGCNT	0x1E	APG CNT7	APG CNT6	APG CNT5	APG CNT4	APG CNT3	APG CNT2	APG CNT1	APG CNT0	0x00	R/W
Reserved	0x1F	-*1	-*1	-*1	-*1	-*1	-*1	-*1	-*1	-	-*1
PWM0PRDL	0x20	PWM0 PRD7	PWM0 PRD6	PWM0 PRD5	PWM0 PRD4	PWM0 PRD3	PWM0 PRD2	PWM0 PRD1	PWM0 PRD0	0x00	R/W
PWM0PRDH	0x21	PWM0 PRD15	PWM0 PRD14	PWM0 PRD13	PWM0 PRD12	PWM0 PRD11	PWM0 PRD10	PWM0 PRD9	PWM0 PRD8	0x00	R/W
PWM0DTYL	0x22	PWM0 DTY7	PWM0 DTY6	PWM0 DTY5	PWM0 DTY4	PWM0 DTY3	PWM0 DTY2	PWM0 DTY1	PWM0 DTY0	0x00	R/W
PWM0DTYH	0x23	PWM0 DTY15	PWM0 DTY14	PWM0 DTY13	PWM0 DTY12	PWM0 DTY11	PWM0 DTY10	PWM0 DTY9	PWM0 DTY8	0x00	R/W
PWM1PHSL	0x24	PWM1 PHS7	PWM1 PHS6	PWM1 PHS5	PWM1 PHS4	PWM1 PHS3	PWM1 PHS2	PWM1 PHS1	PWM1 PHS0	0x00	R/W
PWM1PHSH	0x25	PWM1 PHS15	PWM1 PHS14	PWM1 PHS13	PWM1 PHS12	PWM1 PHS11	PWM1 PHS10	PWM1 PHS9	PWM1 PHS8	0x00	R/W
PWMXPRDL	0x26	PWMX PRD7	PWMX PRD6	PWMX PRD5	PWMX PRD4	PWMX PRD3	PWMX PRD2	PWMX PRD1	PWMX PRD0	0x00	R/W
PWMXPRDH	0x27	PWMX PRD15	PWMX PRD14	PWMX PRD13	PWMX PRD12	PWMX PRD11	PWMX PRD10	PWMX PRD9	PWMX PRD8	0x00	R/W
PWMXDTYL	0x28	PWMX DTY7	PWMX DTY6	PWMX DTY5	PWMX DTY4	PWMX DTY3	PWMX DTY2	PWMX DTY1	PWMX DTY0	0x00	R/W
PWMXDTYH	0x29	PWMX DTY15	PWMX DTY14	PWMX DTY13	PWMX DTY12	PWMX DTY11	PWMX DTY10	PWMX DTY9	PWMX DTY8	0x00	R/W
Reserved	0x2A : 0x2F	-*1	-*1	-*1	-*1	-*1	-*1	-*1	-*1	-	-*1
PWMGEN0	0x30	P0DLY D1	P0DLY D0	P0DLY C2	P0DLY C1	P0DLY C0	P0DLY B2	P0DLY B1	P0DLY B0	0x92	R/W

*1 prohibited
*0x in the head of for each character means a hex digit.
If there is nothing, it means decimal numeral

© 2015 ROHM Co., Ltd. All rights reserved.

Name	Address	b7	b6	b5	b4	b3	b2	b1	b0	Initial Value	R/W
PWMGEN1	0x31	P1DLY D1	P1DLY D0	P1DLY C2	P1DLY C1	P1DLY C0	P1DLY B2	P1DLY B1	P1DLY B0	0x92	R/W
Reserved	0x32 : 0x3F	-*1	-*1	-*1	-*1	-*1	-*1	-*1	-*1	-	-*1
GPIN	0x40	-*1	-*1	-*1	-*1	PI3	PI2	PI1	PI0	-	R
GPOUT	0x41	-*1	-*1	-*1	-*1	PO3	PO2	PO1	PO0	0x00	R/W
GPDIR	0x42	-*1	-*1	-*1	-*1	PD3	PD2	PD1	PD0	0x00	R/W
GPPU	0x43	-*1	-*1	-*1	-*1	PPU3	PPU2	PPU1	PPU0	0x00	R/W
GPPD	0x44	-*1	-*1	-*1	-*1	PPD3	PPD2	PPD1	PPD0	0xFF	R/W
Reserved	0x45 : 0x4F	-*1	-*1	-*1	-*1	-*1	-*1	-*1	-*1	-	-*1
RXCNT_1	0x50	-*1	-*1	-*1	RX1 CNT4	RX1 CNT3	RX1 CNT2	RX1 CNT1	RX1 CNT0	0x00	R/W
RXCNT_2	0x51	-*1	-*1	-*1	RX2 CNT4	RX2 CNT3	RX2 CNT2	RX2 CNT1	RX2 CNT0	0x00	R/W
RXSTT_1	0x52	PRE1	BSY1	RDN1	ERF1	ERP1	ERC1	RCV2	RCV1	0x00	R
RXSTT_2	0x53	PRE2	BSY2	RDN2	ERF2	ERP2	ERC2	RCV2	RCV1	0x00	R
Reserved	0x54 : 0x5F	-*1	-*1	-*1	-*1	-*1	-*1	-*1	-*1	-	-*1
RXDAT_1	0x60 : 0x7F	Last 32 Bytes received by Demodulator 1								0x00	R
RXDAT_2	0x80 : 0x9F	Last 32 Bytes received by Demodulator 2								0x00	R
FLTPRDL	0xA0	FLT PRD7	FLT PRD6	FLT PRD5	FLT PRD4	FLT PRD3	FLT PRD2	FLT PRD1	FLT PRD0	0x00	R/W
FLTPRDH	0xA1	FLT PRD15	FLT PRD14	FLT PRD13	FLT PRD12	FLT PRD11	FLT PRD10	FLT PRD9	FLT PRD8	0x00	R/W
Reserved	0xA2 : 0xAF	-*1	-*1	-*1	-*1	-*1	-*1	-*1	-*1	-	-*1
ANA_STAT	0xB0	-*1	-*1	-*1	TCX_RE ADY	OCP	TSD	UVLO	OVLO	0x02	R
ANA_ERR_ CLR	0xB1	-*1	-*1	-*1	-*1	OCP ERCL	-*1	-*1	-*1	0x00	R/W
Reserved	0xB2 : 0xC3	-*1	-*1	-*1	-*1	-*1	-*1	-*1	-*1	-	-*1
ERR_MODE	0xC4	-*1	-*1	-*1	-*1	-*1	-*1	ERR_ SEL	-*1	0x00	R/W
Reserved	0xC5 : 0xFF	-*1	-*1	-*1	-*1	-*1	-*1	-*1	-*1	-	-*1

*1 prohibited
*0x in the head of for each character means a hex digit.
If there is nothing, it means decimal numeral

© 2015 ROHM Co., Ltd. All rights reserved.

Typical Performance Curves

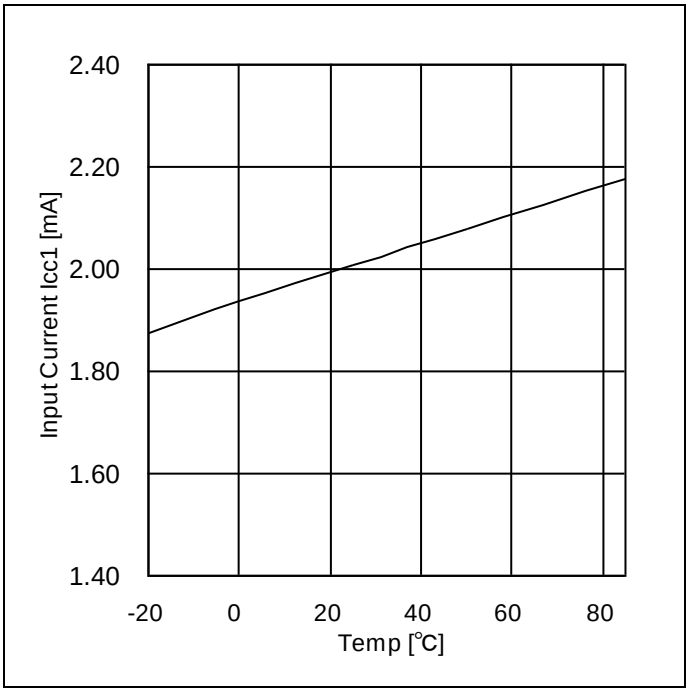

Figure 13. I_{CC1} [mA] vs. Temp. [°C]
(TCXOIN CLK = 0kHz)

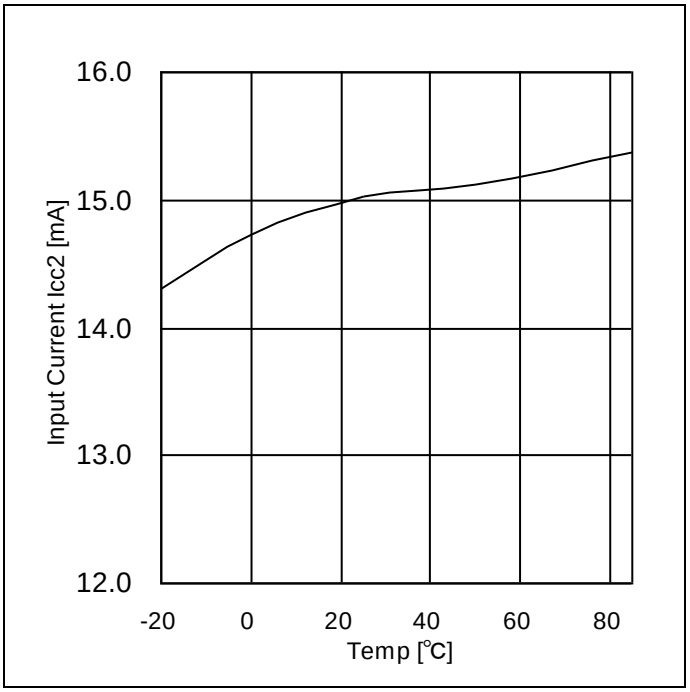

Figure 14. I_{CC2} [mA] vs. Temp. [°C]
(TCXOIN CLK = 32MHZ)

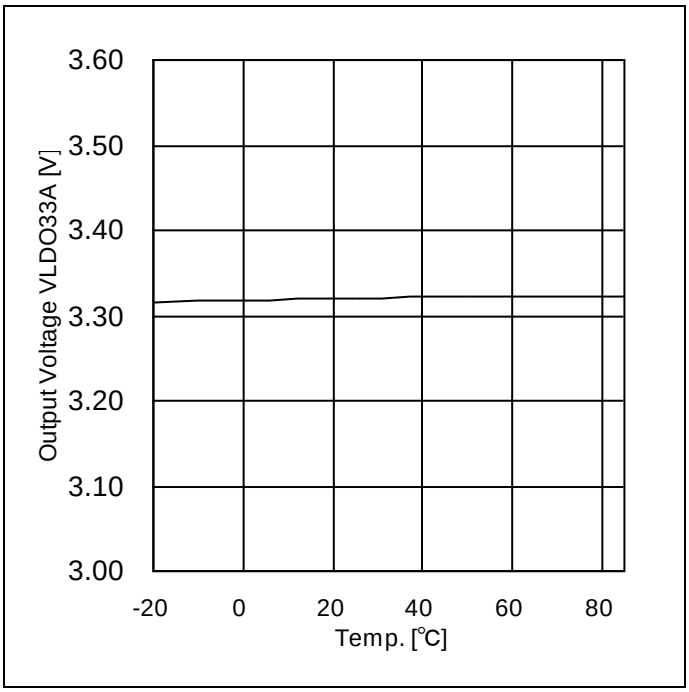

Figure 15. Output Voltage V_{LDO33A} [V] vs. Temp. [°C]
(Output Current = 0mA)

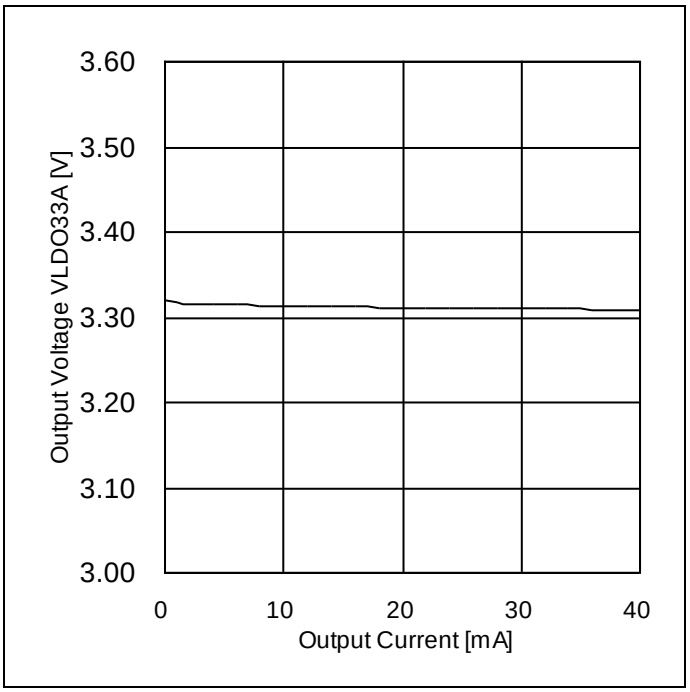

Figure 16. Output Voltage V_{LDO33A} [V] vs
Output current [mA]
(Temp. = 25°C)

© 2015 ROHM Co., Ltd. All rights reserved.

Typical Performance Curves - continued

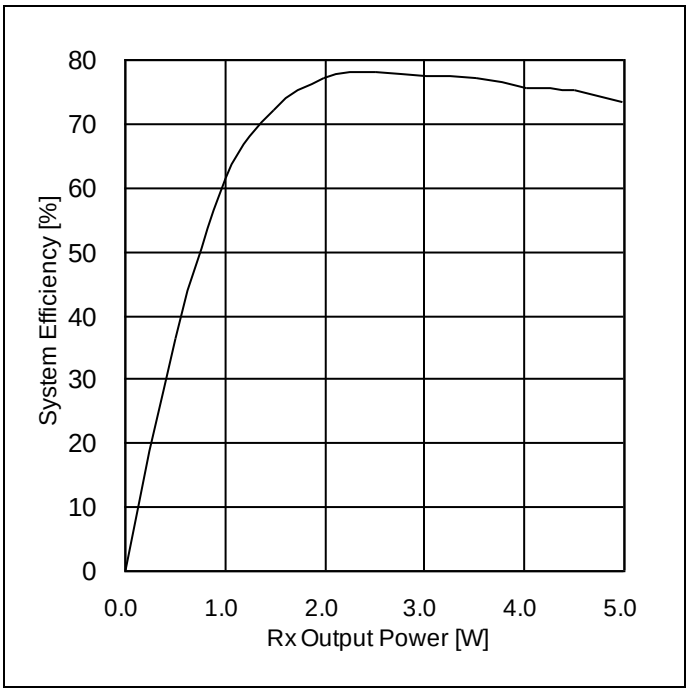

Figure 17-1. System Efficiency [%] vs Rx Output Power [W]
(Rx=BD57011GWL,Vout=5V)

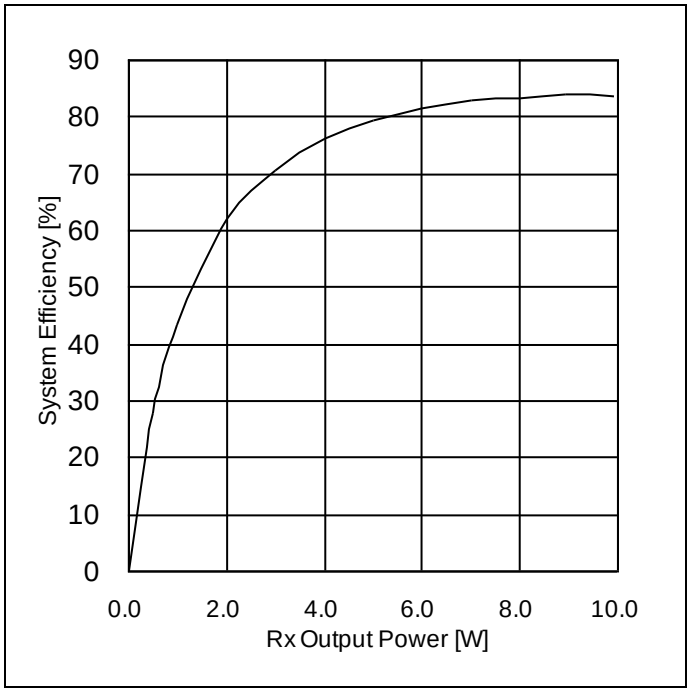

Figure 17-2. System Efficiency [%] vs Rx Output Power [W]
(Rx=BD57015GWL,Vout=10V)

Timing Chart

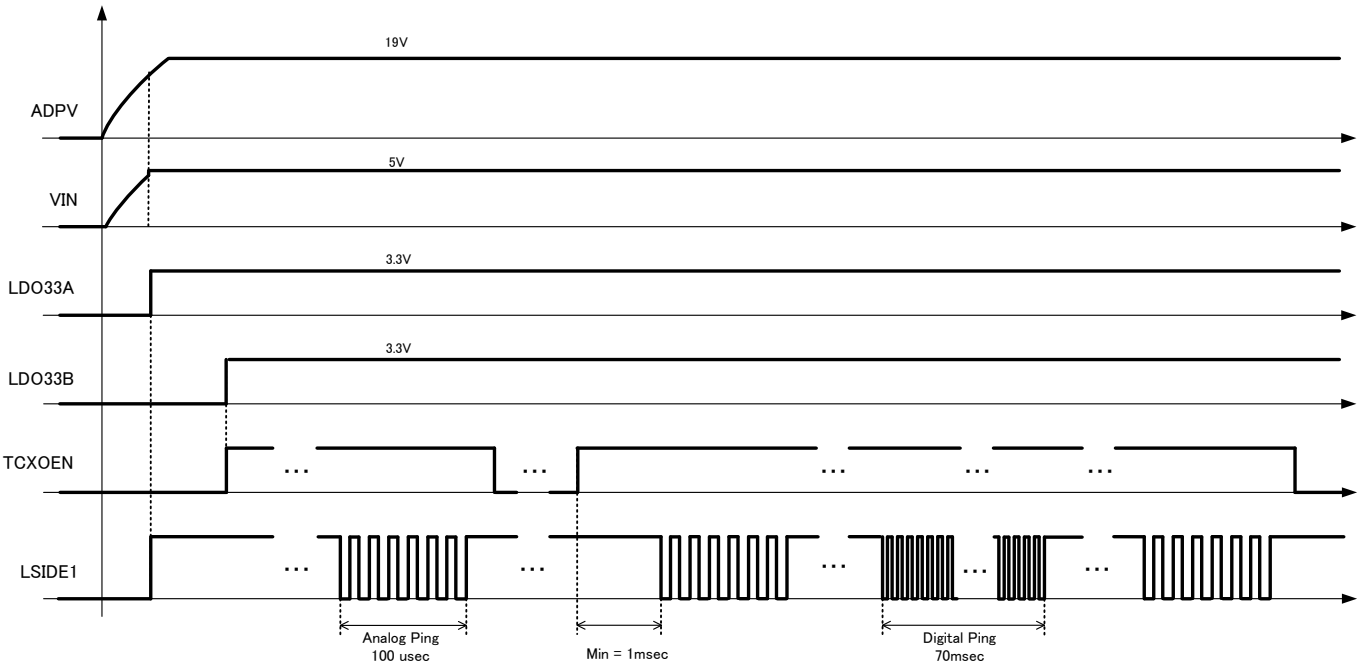

Figure 18. Start up sequence

© 2015 ROHM Co., Ltd. All rights reserved.

Application Example

1) Recommended Circuit Diagram

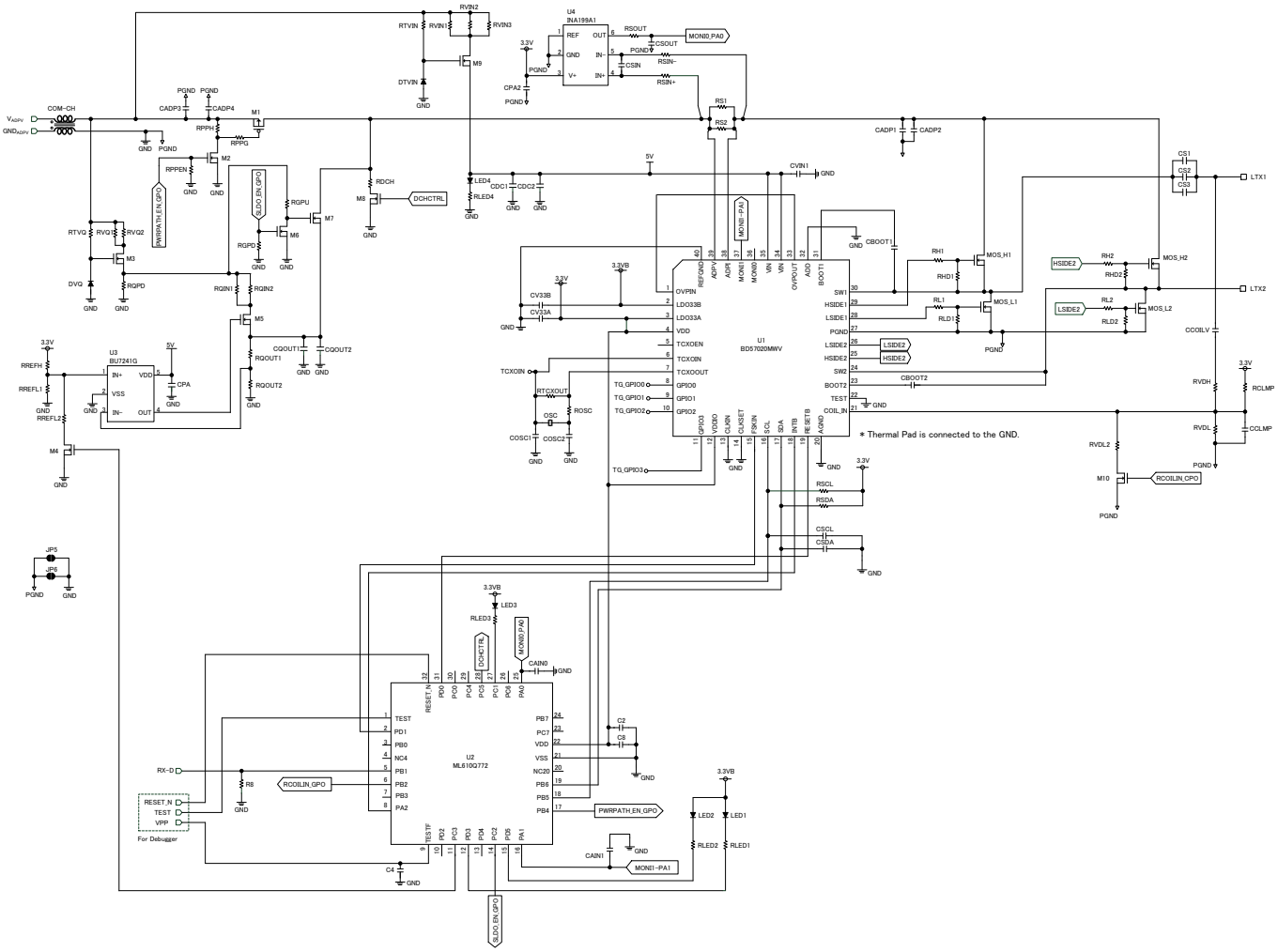

Changing the software may cause the changing the circuit diagram.

Figure 19. Typical application circuit diagram

2) Parts list

Parts Name	Recommended Value	Unit	Recommended Part	Maker	Number
Tx Coil					
LTX	24	µH	760 308 110	Würth	1
IC					
U1	-	-	BD57020MWV	ROHM	1
U2	-	-	ML610Q772	LAPIS	1
U3	-	-	BU7241G	ROHM	1
U4	-	-	INA199A1	TI	1
OSC	32	MHz	NX3225GA	NDK	1
FET/Tr					
MOS_H2, MOS_L2	10	A	RQ3E100GN	ROHM	2
MOS_H1, MOS_L1, M7	10	A	RQ3E100GN	ROHM	3
M1	-7	A	RQ1E070RP	ROHM	1
M2, M4, M6, M8, M10	0.2	A	RUE002N02	ROHM	5
M3, M5, M9	2	A	RUR020N02	ROHM	3
Diode/LED					
DVQ	6.8	V	EDZTE616.8B	ROHM	1
DTVIN	6.2	V	EDZTE616.2B	ROHM	1
LED1, LED2, LED3, LED4	VF<2.0V	-	SML-P11MT	ROHM	4

© 2015 ROHM Co., Ltd. All rights reserved.

Parts Name	Recommended Value	Unit	Recommended Part	Maker	Number
Coil/Trans					
COM_CH	-	ohm	-	-	SHORT
Capacitor					
CADP1	0.1	µF	-	MURATA	1
CADP2	10	µF	-	MURATA	1
CADP3	10	µF	-	MURATA	1
CADP4	22	µF	-	MURATA	1
CS1	0.033	µF	GRM32D7U2E333JW31	MURATA	1
CS2	0.033	µF	GRM32D7U2E333JW31	MURATA	1
CS3	0.033	µF	GRM32D7U2E333JW31	MURATA	1
CVIN1	1	µF	-	MURATA	1
CBOOT1, CBOOT2	0.22	µF	-	MURATA	1
CDC1, CDC2	10	µF	-	MURATA	2
CV33B	1	µF	-	MURATA	1
CV33A	1	µF	-	MURATA	1
CSCL	10	pF	-	MURATA	1
CSDA	-	F	-	-	OPEN
CAIN0	0.1	µF	-	MURATA	1
CAIN1	0.01	µF	-	MURATA	1
CCOILV	1000	pF	GRM21A7U2E102JW31	MURATA	1
CCLMP	-	F	-	-	OPEN
CPA	0.01	µF	-	MURATA	1
CPA2	0.01	µF	-	MURATA	1
CSIN	0.1	µF	-	MURATA	1
CSOUT	-	F	-	-	OPEN
CQOUT1	47	µF	-	MURATA	1
CQOUT2	1	µF	-	MURATA	1
COSC1, COSC2	-	F	-	-	OPEN
C2	1	µF	-	MURATA	1
C4	4700	pF	-	MURATA	1
C8	2200	pF	-	MURATA	1
Resistor					
RS1, RS2	100	mΩ	-	ROHM	2
RTCXOUT	1	MΩ	-	ROHM	1
RH1, RH2	20	Ω	-	ROHM	2
RHD1, RHD2	2	MΩ	-	ROHM	2
RL1, RL2	20	Ω	-	ROHM	2
RLD1, RLD2	-	Ω	-	-	OPEN
RTVIN	100	kΩ	-	ROHM	1
RVIN1, RVIN2, RVIN3	680	Ω	-	ROHM	3
RDCH	1	kΩ	-	ROHM	1
RSCL	1.5	kΩ	-	ROHM	1
RSDA	3.3	kΩ	-	ROHM	1
RLED1, RLED2, RLED3	1.5	kΩ	-	ROHM	3
RLED4	3	kΩ	-	ROHM	1
RPPH	100	kΩ	-	ROHM	1
RPPEN	100	kΩ	-	ROHM	1
RPPG	100	kΩ	-	ROHM	1
RTVQ	100	kΩ	-	ROHM	1
RVQ1, RVQ2	47	Ω	-	ROHM	2
RQPD	100	kΩ	-	ROHM	1
RGPD	100	kΩ	-	ROHM	1

© 2015 ROHM Co., Ltd. All rights reserved.

Parts Name	Recommended Value	Unit	Recommended Part	Maker	Number
RGPU	10	kΩ	-	ROHM	1
RQIN1, RQIN2	12	Ω	-	ROHM	2
RQOUT1	2	kΩ	-	ROHM	1
RQOUT2	200	kΩ	-	ROHM	1
RREFH	100	kΩ	-	ROHM	1
RREFL1	1	MΩ	-	ROHM	1
RREFL2	4.7	kΩ	-	ROHM	1
ROSC	-	Ω	-	-	SHORT
RVDH	33	kΩ	MCR10EZHF333	ROHM	1
RVDL	6.2	kΩ	-	ROHM	1
RVDL2	6.2	kΩ	-	ROHM	1
RCLMP	-	Ω	-	-	OPEN
RSIN-	1	Ω	-	ROHM	1
RSIN+	1	Ω	-	ROHM	1
RSOUT	1	kΩ	-	ROHM	1
R8	36	kΩ	-	ROHM	1

3) Selection of Components Externally Connected

Component	Symbol	Limit	Unit
BOOT1 (2) terminal strapping capacity	CBOOT1, CBOOT2	0.1 to 0.47	µF
LDO33A (B) terminal strapping capacity	CV33A, CV33B	0.47 to 2.0	µF
L Side FET gate resistance	RL1, RL2	1.0 to 30	Ω
H Side FET gate resistance	RH1, RH2	1.0 to 30	Ω
Input current sense resistance	RS	30 to 100	mΩ

About the above operating condition, it is the value in the IC only. Please be careful enough on the occasion of the value setting with the set.

© 2015 ROHM Co., Ltd. All rights reserved.

Power Dissipation

(UQFN040V5050 Package)

Use a thermal design that allows for a sufficient margin by taking into account the permissible power dissipation (Pd) in actual operating conditions.

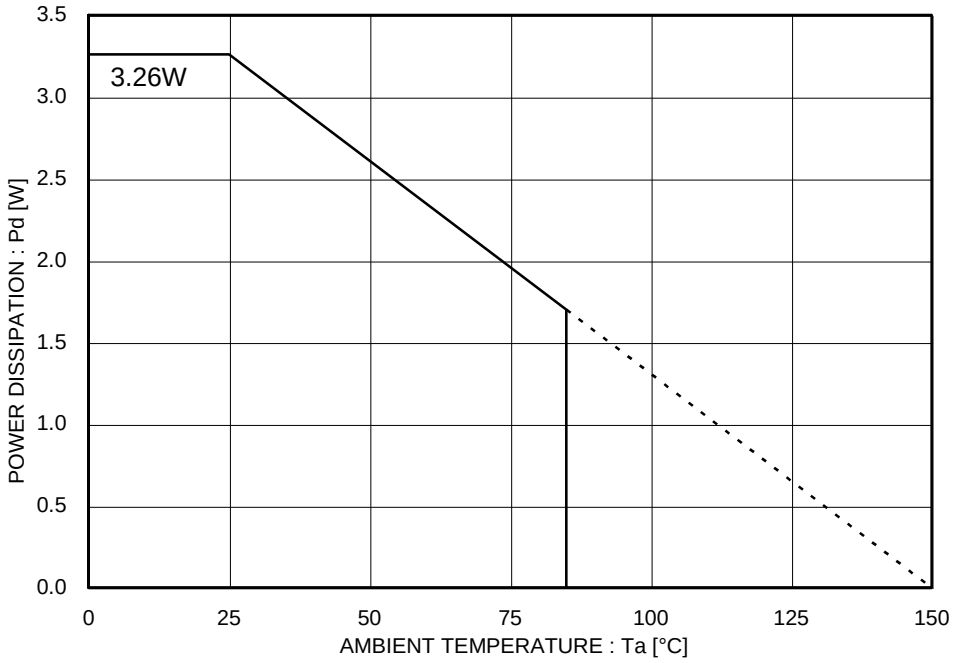

* 74.2mm x 74.2mm x 1.6mm Glass Epoxy Board
(front and back layer heat radiation copper foil 4.5 mm x 4.5 mm,
second and third layer heat radiation copper foil 74.2 mm x 74.2 mm)

Figure 20. Power Dissipation Curve (Pd-Ta Curve)

© 2015 ROHM Co., Ltd. All rights reserved.

I/O equivalent circuits

VIN, OVPOUT terminal

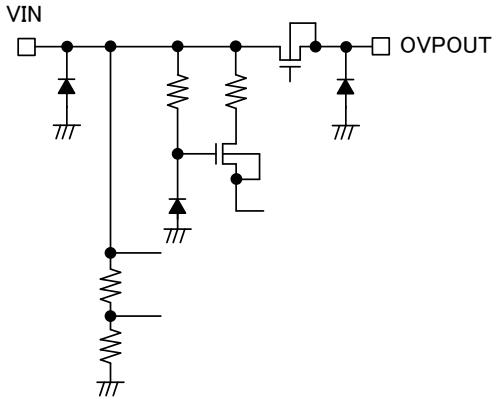

BOOT1, HSIDE1, SW1, LSIDE1, PGND terminal
(BOOT2, HSIDE2, SW2, LSIDE2)

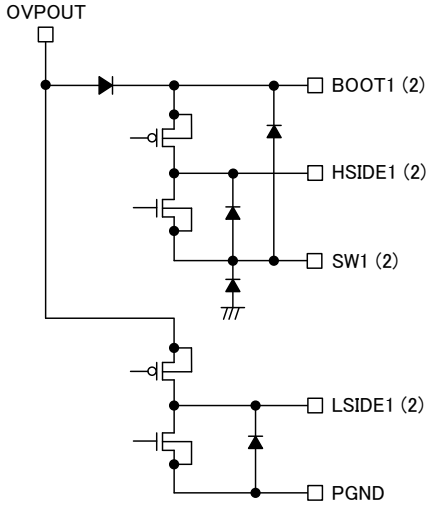

OVPIN, LDO33A (LDO33B) terminal

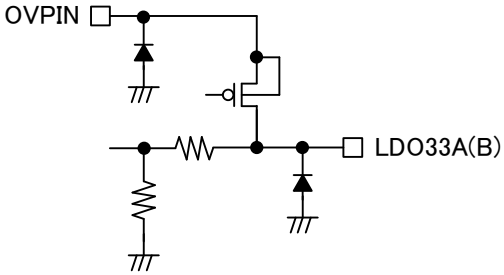

VDD,TCXOIN, TCXOOUT terminal

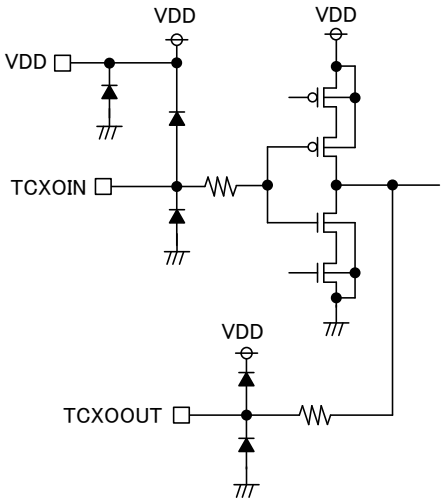

TCXOEN terminal

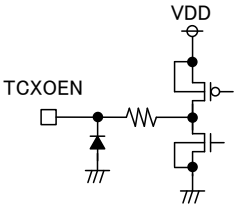

VDDIO,
FSKIN (CLKSET, CLKIN, ADDR, TEST) terminal

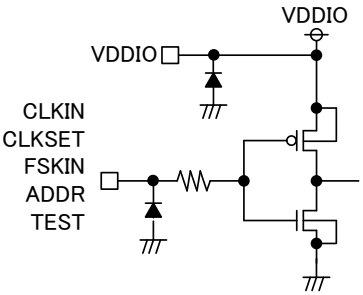

© 2015 ROHM Co., Ltd. All rights reserved.

GPIO0 (GPIO1, 2, 3) terminal

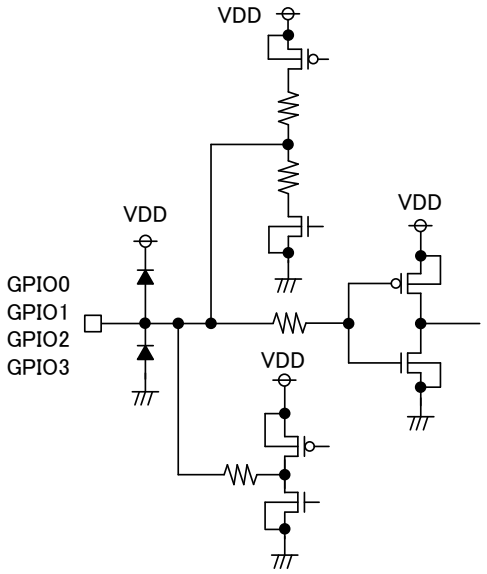

SCL terminal

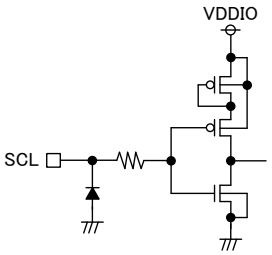

SDA terminal

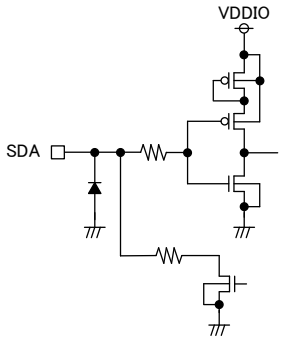

INTB terminal

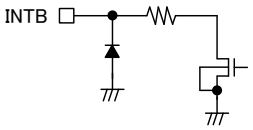

MONI0 terminal

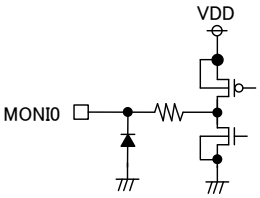

RESETB terminal

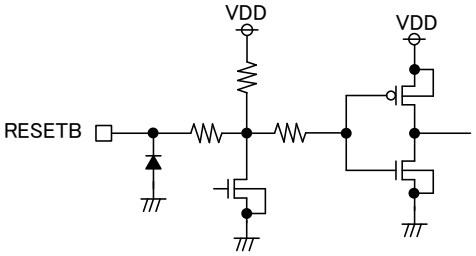

COIL_IN terminal

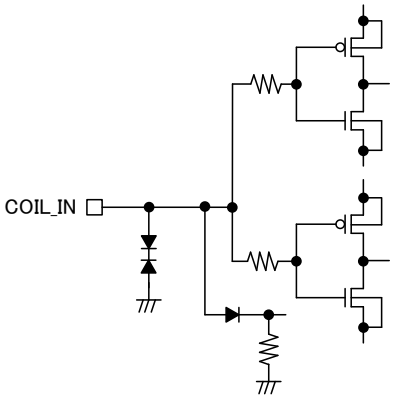

ADPV, ADPI terminal

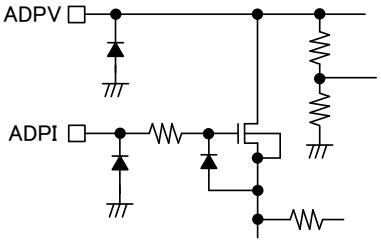

MONI1 terminal

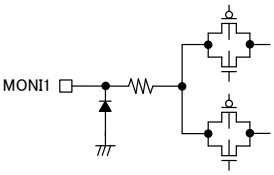

© 2015 ROHM Co., Ltd. All rights reserved.

Operational Notes

1. **Reverse Connection of Power Supply**
   Connecting the power supply in reverse polarity can damage the IC. Take precautions against reverse polarity when connecting the power supply, such as mounting an external diode between the power supply and the IC's power supply pins.

2. **Power Supply Lines**
   Design the PCB layout pattern to provide low impedance supply lines. Separate the ground and supply lines of the digital and analog blocks to prevent noise in the ground and supply lines of the digital block from affecting the analog block. Furthermore, connect a capacitor to ground at all power supply pins. Consider the effect of temperature and aging on the capacitance value when using electrolytic capacitors.

3. **Ground Voltage**
   Ensure that no pins are at a voltage below that of the ground pin at any time, even during transient condition.

4. **Ground Wiring Pattern**
   When using both small-signal and large-current ground traces, the two ground traces should be routed separately but connected to a single ground at the reference point of the application board to avoid fluctuations in the small-signal ground caused by large currents. Also ensure that the ground traces of external components do not cause variations on the ground voltage. The ground lines must be as short and thick as possible to reduce line impedance.

5. **Thermal Consideration**
   Should by any chance the power dissipation rating be exceeded the rise in temperature of the chip may result in deterioration of the properties of the chip. In case of exceeding this absolute maximum rating, increase the board size and copper area to prevent exceeding the Pd rating.

6. **Recommended Operating Conditions**
   These conditions represent a range within which the expected characteristics of the IC can be approximately obtained. The electrical characteristics are guaranteed under the conditions of each parameter.

7. **Inrush Current**
   When power is first supplied to the IC, it is possible that the internal logic may be unstable and inrush current may flow instantaneously due to the internal powering sequence and delays, especially if the IC has more than one power supply. Therefore, give special consideration to power coupling capacitance, power wiring, width of ground wiring, and routing of connections.

8. **Operation Under Strong Electromagnetic Field**
   Operating the IC in the presence of a strong electromagnetic field may cause the IC to malfunction.

9. **Testing on Application Boards**
   When testing the IC on an application board, connecting a capacitor directly to a low-impedance output pin may subject the IC to stress. Always discharge capacitors completely after each process or step. The IC's power supply should always be turned off completely before connecting or removing it from the test setup during the inspection process. To prevent damage from static discharge, ground the IC during assembly and use similar precautions during transport and storage.

10. **Inter-pin Short and Mounting Errors**
    Ensure that the direction and position are correct when mounting the IC on the PCB. Incorrect mounting may result in damaging the IC. Avoid nearby pins being shorted to each other especially to ground, power supply and output pin. Inter-pin shorts could be due to many reasons such as metal particles, water droplets (in very humid environment) and unintentional solder bridge deposited in between pins during assembly to name a few.

11. **Unused Input Pins**
    Input pins of an IC are often connected to the gate of a MOS transistor. The gate has extremely high impedance and extremely low capacitance. If left unconnected, the electric field from the outside can easily charge it. The small charge acquired in this way is enough to produce a significant effect on the conduction through the transistor and cause unexpected operation of the IC. So unless otherwise specified, unused input pins should be connected to the power supply or ground line.

© 2015 ROHM Co., Ltd. All rights reserved.

Operational Notes – continued

12. Regarding the Input Pin of the IC

This monolithic IC contains P+ isolation and P substrate layers between adjacent elements in order to keep them isolated. P-N junctions are formed at the intersection of the P layers with the N layers of other elements, creating a parasitic diode or transistor. For example (refer to figure below):

When GND > Pin A and GND > Pin B, the P-N junction operates as a parasitic diode.
When GND > Pin B, the P-N junction operates as a parasitic transistor.

Parasitic diodes inevitably occur in the structure of the IC. The operation of parasitic diodes can result in mutual interference among circuits, operational faults, or physical damage. Therefore, conditions that cause these diodes to operate, such as applying a voltage lower than the GND voltage to an input pin (and thus to the P substrate) should be avoided.

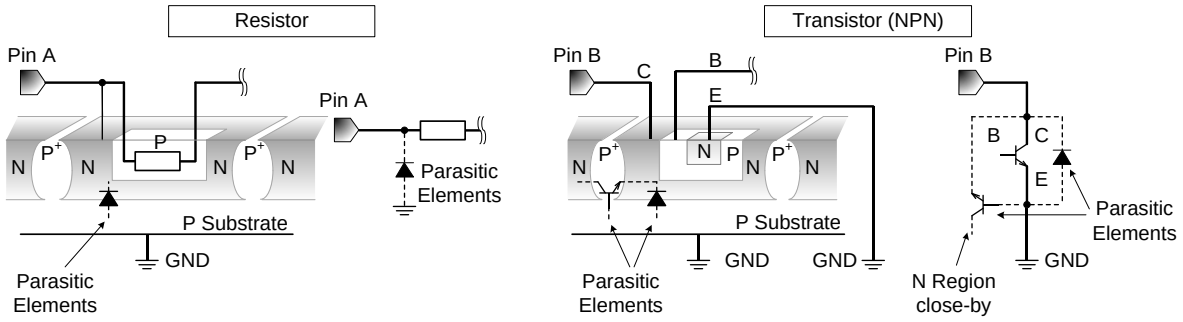

Figure 21. Example of monolithic IC structure

13. Ceramic Capacitor

When using a ceramic capacitor, determine the dielectric constant considering the change of capacitance with temperature and the decrease in nominal capacitance due to DC bias and others.

14. Area of Safe Operation (ASO)

Operate the IC such that the output voltage, output current, and power dissipation are all within the Area of Safe Operation (ASO).

15. Thermal Shutdown Circuit(TSD)

This IC has a built-in thermal shutdown circuit that prevents heat damage to the IC. Normal operation should always be within the IC's power dissipation rating. If however the rating is exceeded for a continued period, the junction temperature (Tj) will rise which will activate the TSD circuit that will turn OFF all output pins. When the Tj falls below the TSD threshold, the circuits are automatically restored to normal operation.
Note that the TSD circuit operates in a situation that exceeds the absolute maximum ratings and therefore, under no circumstances, should the TSD circuit be used in a set design or for any purpose other than protecting the IC from heat damage.

16. Over Current Protection Circuit (OCP)

This IC incorporates an integrated overcurrent protection circuit that is activated when the load is shorted. This protection circuit is effective in preventing damage due to sudden and unexpected incidents. However, the IC should not be used in applications characterized by continuous operation or transitioning of the protection circuit.

© 2015 ROHM Co., Ltd. All rights reserved.

Ordering Information

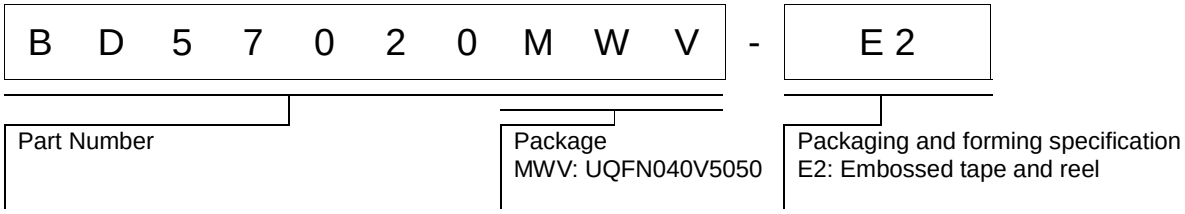

Marking Diagrams

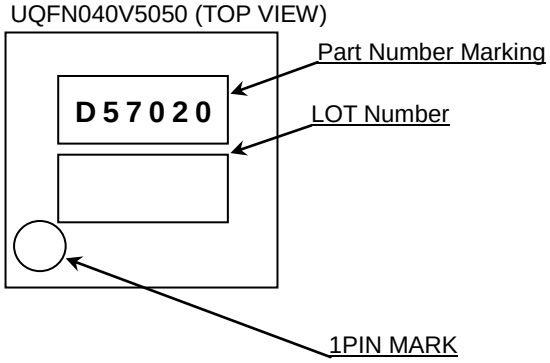

© 2015 ROHM Co., Ltd. All rights reserved.

Physical Dimension, Tape and Reel Information

Package Name	UQFN040V5050

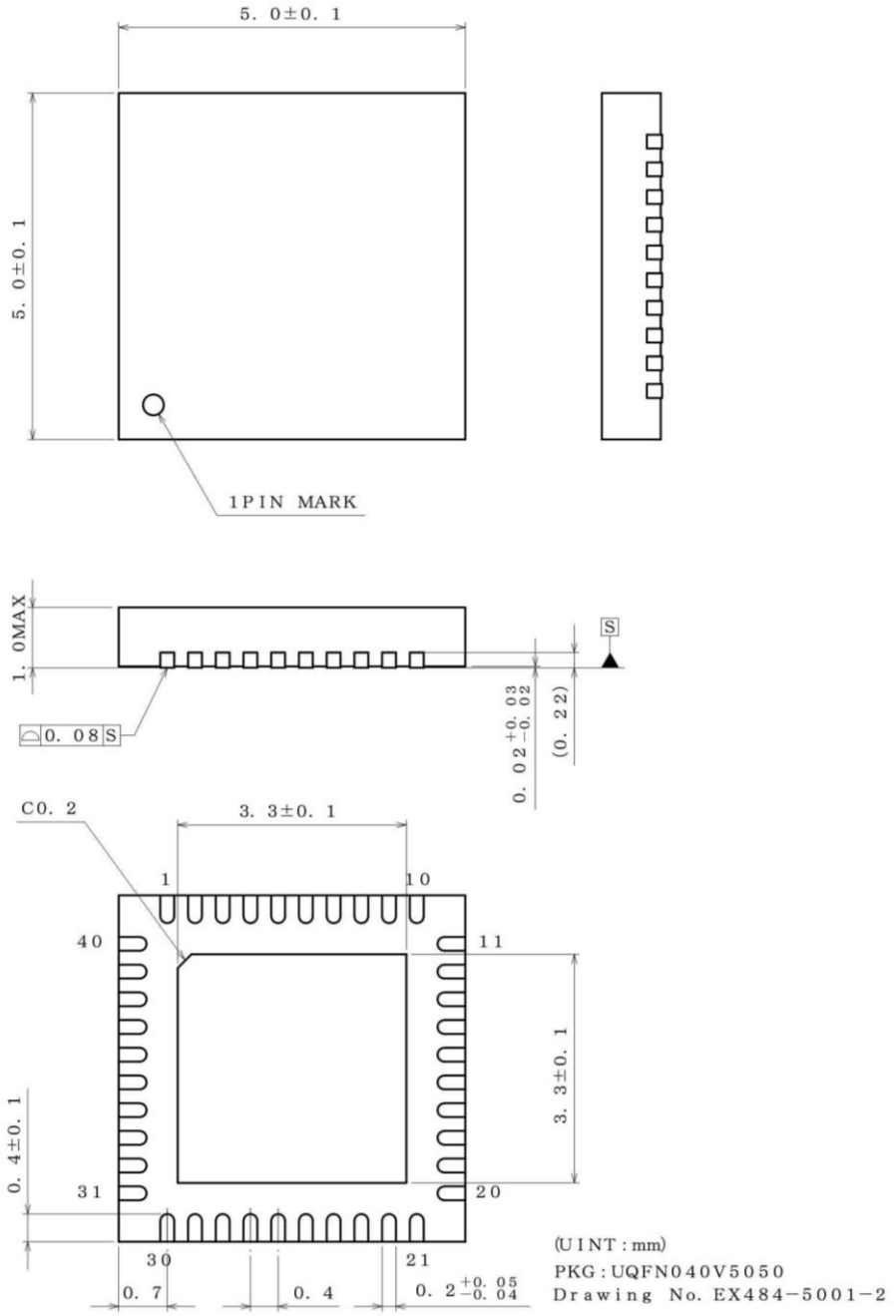

<Tape and Reel information>

Tape	Embossed carrier tape
Quantity	2500pcs
Direction of feed	E2 (The direction is the 1pin of product is at the upper left when you hold reel on the left hand and you pull out the tape on the right hand)

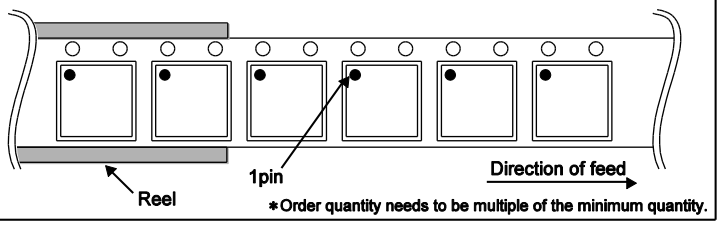

∗Order quantity needs to be multiple of the minimum quantity.

© 2015 ROHM Co., Ltd. All rights reserved.

Revision History

Date	Revision	Changes
27.Jul.2015	001	New Release
10.Aug.2015	002	P1 Figure2. Deleted the line.
		P2 Recommended Operating Conditions VADPV Min = 4.8V →VADPV Min = 4.6V
		P5 Pin Description MONI1 Input voltage value and input current value output. →Input voltage value
		P15 About the input power detection Changed the paragraphs.
		P25 Figure19. Circuit diagram modified.
		P25 to P27 Parts list Parts list modified.
25.Mar.2016	003	P1 Figure 1. Modified the figure.
		P3 Electrical Characteristics Corrected the font of unit.
		P7 1. Pre-driver block Changed the sentence. Corrected the font of unit.
		P11 (4) APGDUR Corrected the font of unit.
		P12 (5) APGMSR Corrected the font of unit.
		P13 (1) RXCTRL Changed the sentence.
		P14 (3) CLKDIV Corrected the font of unit.
		P14 (4) FLTPRD Corrected the font of unit.
		P17 About External OCP movement Changed the sentence.
		P24 Typical Performance Curves Changed a name of the efficiency data. Figure 17. → Figure 17-1. Added to the efficiency data. Figure 17-2.
		P25 1) Recommended Circuit Diagram Modified the circuit diagram.
		P25 to P27 2) Parts list Modified the parts list.
6.Feb.2017	004	P1 General Description / Features / Package Change the sentence.
		P7 (1) PWM0PRD, (2) PWM0DTY Change the sentence.
		P9 (6) PWRCTRL Added the explanation.
		P9 3. FSK Modified the sentence.
		P9 (1) PWMXPRD Change the sentence.
		P10 (2) PWMXDTY Change the sentence.
		P10 (3) PDCTRL Added the explanation.
		P11 (2) APGSTT Modified the sentence.
		P11 (4) APGDUR Change the sentence.
		P12 (5) APGMSR Change the sentence.
		P12 5. Interrupt control Modified the sentence

© 2015 ROHM Co., Ltd. All rights reserved.

Date	Revision	Changes
6.Feb.2017	004	P12 (1) INTSTT Change the sentence.
		P13 (2) INTENB Change the sentence.
		P13 (1) RXCTRL, (2) RXSTT Change the sentence. Added the explanation..
		P14 (3) CLKDIV, (4) FLTPRD, (5) RXSTT_1 Change the sentence.
		P15 (6) RXSTT_2 Change the sentence.
		P15 (7) RXCNT Added the explanation.
		P15 (8) RXDAT_1, (6) RXDAT_2 Change the sentence.
		P16, 17 (1) – (5) Added the explanation.
		P17 10. Reporting the Identify Added the explanation
		P17 (1)ANA_STAT, (2) ANA_ERR_CRL Added the explanation.
		P18 (1)ANA_STAT, (2) ANA_ERR_CRL Added the explanation.
		P19 About External OCP movement Change the sentence
		P23, 24 List of registers Modified

© 2015 ROHM Co., Ltd. All rights reserved.

Notice

Precaution on using ROHM Products

1. Our Products are designed and manufactured for application in ordinary electronic equipments (such as AV equipment, OA equipment, telecommunication equipment, home electronic appliances, amusement equipment, etc.). If you intend to use our Products in devices requiring extremely high reliability (such as medical equipment (Note 1), transport equipment, traffic equipment, aircraft/spacecraft, nuclear power controllers, fuel controllers, car equipment including car accessories, safety devices, etc.) and whose malfunction or failure may cause loss of human life, bodily injury or serious damage to property ("Specific Applications"), please consult with the ROHM sales representative in advance. Unless otherwise agreed in writing by ROHM in advance, ROHM shall not be in any way responsible or liable for any damages, expenses or losses incurred by you or third parties arising from the use of any ROHM's Products for Specific Applications.

(Note1) Medical Equipment Classification of the Specific Applications

JAPAN	USA	EU	CHINA
CLASSⅢ	CLASSⅢ	CLASSⅡb	CLASSⅢ
CLASSⅣ		CLASSⅢ	

2. ROHM designs and manufactures its Products subject to strict quality control system. However, semiconductor products can fail or malfunction at a certain rate. Please be sure to implement, at your own responsibilities, adequate safety measures including but not limited to fail-safe design against the physical injury, damage to any property, which a failure or malfunction of our Products may cause. The following are examples of safety measures:
   [a] Installation of protection circuits or other protective devices to improve system safety
   [b] Installation of redundant circuits to reduce the impact of single or multiple circuit failure

3. Our Products are designed and manufactured for use under standard conditions and not under any special or extraordinary environments or conditions, as exemplified below. Accordingly, ROHM shall not be in any way responsible or liable for any damages, expenses or losses arising from the use of any ROHM's Products under any special or extraordinary environments or conditions. If you intend to use our Products under any special or extraordinary environments or conditions (as exemplified below), your independent verification and confirmation of product performance, reliability, etc, prior to use, must be necessary:
   [a] Use of our Products in any types of liquid, including water, oils, chemicals, and organic solvents
   [b] Use of our Products outdoors or in places where the Products are exposed to direct sunlight or dust
   [c] Use of our Products in places where the Products are exposed to sea wind or corrosive gases, including Cl_2, H_2S, NH_3, SO_2, and NO_2
   [d] Use of our Products in places where the Products are exposed to static electricity or electromagnetic waves
   [e] Use of our Products in proximity to heat-producing components, plastic cords, or other flammable items
   [f] Sealing or coating our Products with resin or other coating materials
   [g] Use of our Products without cleaning residue of flux (even if you use no-clean type fluxes, cleaning residue of flux is recommended); or Washing our Products by using water or water-soluble cleaning agents for cleaning residue after soldering
   [h] Use of the Products in places subject to dew condensation

4. The Products are not subject to radiation-proof design.

5. Please verify and confirm characteristics of the final or mounted products in using the Products.

6. In particular, if a transient load (a large amount of load applied in a short period of time, such as pulse. is applied, confirmation of performance characteristics after on-board mounting is strongly recommended. Avoid applying power exceeding normal rated power; exceeding the power rating under steady-state loading condition may negatively affect product performance and reliability.

7. De-rate Power Dissipation depending on ambient temperature. When used in sealed area, confirm that it is the use in the range that does not exceed the maximum junction temperature.

8. Confirm that operation temperature is within the specified range described in the product specification.

9. ROHM shall not be in any way responsible or liable for failure induced under deviant condition from what is defined in this document.

Precaution for Mounting / Circuit board design

1. When a highly active halogenous (chlorine, bromine, etc.) flux is used, the residue of flux may negatively affect product performance and reliability.

2. In principle, the reflow soldering method must be used on a surface-mount products, the flow soldering method must be used on a through hole mount products. If the flow soldering method is preferred on a surface-mount products, please consult with the ROHM representative in advance.

For details, please refer to ROHM Mounting specification

© 2015 ROHM Co., Ltd. All rights reserved.

Precautions Regarding Application Examples and External Circuits

1. If change is made to the constant of an external circuit, please allow a sufficient margin considering variations of the characteristics of the Products and external components, including transient characteristics, as well as static characteristics.

2. You agree that application notes, reference designs, and associated data and information contained in this document are presented only as guidance for Products use. Therefore, in case you use such information, you are solely responsible for it and you must exercise your own independent verification and judgment in the use of such information contained in this document. ROHM shall not be in any way responsible or liable for any damages, expenses or losses incurred by you or third parties arising from the use of such information.

Precaution for Electrostatic

This Product is electrostatic sensitive product, which may be damaged due to electrostatic discharge. Please take proper caution in your manufacturing process and storage so that voltage exceeding the Products maximum rating will not be applied to Products. Please take special care under dry condition (e.g. Grounding of human body / equipment / solder iron, isolation from charged objects, setting of Ionizer, friction prevention and temperature / humidity control).

Precaution for Storage / Transportation

1. Product performance and soldered connections may deteriorate if the Products are stored in the places where:
   [a] the Products are exposed to sea winds or corrosive gases, including Cl2, H2S, NH3, SO2, and NO2
   [b] the temperature or humidity exceeds those recommended by ROHM
   [c] the Products are exposed to direct sunshine or condensation
   [d] the Products are exposed to high Electrostatic

2. Even under ROHM recommended storage condition, solderability of products out of recommended storage time period may be degraded. It is strongly recommended to confirm solderability before using Products of which storage time is exceeding the recommended storage time period.

3. Store / transport cartons in the correct direction, which is indicated on a carton with a symbol. Otherwise bent leads may occur due to excessive stress applied when dropping of a carton.

4. Use Products within the specified time after opening a humidity barrier bag. Baking is required before using Products of which storage time is exceeding the recommended storage time period.

Precaution for Product Label

A two-dimensional barcode printed on ROHM Products label is for ROHM's internal use only.

Precaution for Disposition

When disposing Products please dispose them properly using an authorized industry waste company.

Precaution for Foreign Exchange and Foreign Trade act

Since concerned goods might be fallen under listed items of export control prescribed by Foreign exchange and Foreign trade act, please consult with ROHM in case of export.

Precaution Regarding Intellectual Property Rights

1. All information and data including but not limited to application example contained in this document is for reference only. ROHM does not warrant that foregoing information or data will not infringe any intellectual property rights or any other rights of any third party regarding such information or data.

2. ROHM shall not have any obligations where the claims, actions or demands arising from the combination of the Products with other articles such as components, circuits, systems or external equipment (including software).

3. No license, expressly or implied, is granted hereby under any intellectual property rights or other rights of ROHM or any third parties with respect to the Products or the information contained in this document. Provided, however, that ROHM will not assert its intellectual property rights or other rights against you or your customers to the extent necessary to manufacture or sell products containing the Products, subject to the terms and conditions herein.

Other Precaution

1. This document may not be reprinted or reproduced, in whole or in part, without prior written consent of ROHM.

2. The Products may not be disassembled, converted, modified, reproduced or otherwise changed without prior written consent of ROHM.

3. In no event shall you use in any way whatsoever the Products and the related technical information contained in the Products or this document for any military purposes, including but not limited to, the development of mass-destruction weapons.

4. The proper names of companies or products described in this document are trademarks or registered trademarks of ROHM, its affiliated companies or third parties.

© 2015 ROHM Co., Ltd. All rights reserved.

General Precaution

1. Before you use our Products, you are requested to carefully read this document and fully understand its contents. ROHM shall not be in any way responsible or liable for failure, malfunction or accident arising from the use of any ROHM's Products against warning, caution or note contained in this document.

2. All information contained in this document is current as of the issuing date and subject to change without any prior notice. Before purchasing or using ROHM's Products, please confirm the latest information with a ROHM sales representative.

3. The information contained in this document is provided on an "as is" basis and ROHM does not warrant that all information contained in this document is accurate and/or error-free. ROHM shall not be in any way responsible or liable for any damages, expenses or losses incurred by you or third parties resulting from inaccuracy or errors of or concerning such information.

© 2015 ROHM Co., Ltd. All rights reserved.

Mouser Electronics

Authorized Distributor

Click to View Pricing, Inventory, Delivery & Lifecycle Information:

ROHM Semiconductor:

BD57020MWV-E2