Voltage Tracker

250 mA Output Voltage Tracker

BD42530xxx-C Series

General Description

The BD42530xxx-C Series are voltage trackers featuring 45 V absolute maximum voltage, output voltage tracking accuracy of ±10 mV, 250 mA output current and 40 µA (Typ) low current consumption.
These trackers are therefore ideal for applications requiring a direct connection to the battery and a low current consumption.
Ceramic capacitors can be used for phase compensation capacitor of the output. Furthermore, these ICs also feature overcurrent protection to protect the device from damage caused by short-circuiting and an integrated thermal shutdown to protect the device from overheating at overload conditions.

Features

- AEC-Q100 Qualified (Note 1)
- Qualified for Automotive Applications
- Wide Temperature Range (Tj): -40 °C to +150 °C
- Wide Operating Input Range: 3 V to 42 V
- Low Quiescent Current: 40 µA (Typ)
- Output Voltage Tracking Accuracy: ±10 mV
- Over Current Protection (OCP)
- Thermal Shutdown Protection (TSD)

(Note 1: Grade 1)

Packages

W (Typ) x D (Typ) x H (Max)

- EFJ : HTSOP-J8 4.90 mm x 6.00 mm x 1.00 mm

- FPJ : TO252-J5 6.60 mm x 10.10 mm x 2.38 mm

- FP2 : TO263-5 10.16 mm x 15.10 mm x 4.70 mm

Applications

- Automotive
  (Engine-ECU, Body, Air-Conditioner etc.)

Typical Application Circuits

- Components externally connected: 1 µF ≤ C_{IN} (Min), 4.7 µF ≤ C_O (Min)
  Ceramic capacitors with less change in ESR due to temperature characteristics are recommended.

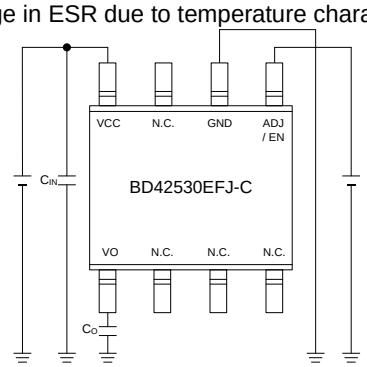

○Product structure : Silicon monolithic integrated circuit ○This product has no designed protection against radioactive rays

© 2016 ROHM Co., Ltd. All rights reserved.

Ordering Information

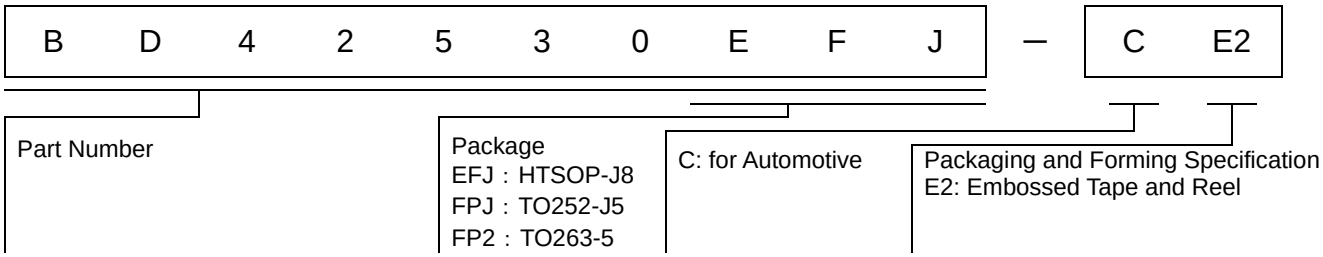

Lineup

Output Current	Package		Orderable Part Number
250 mA	HTSOP-J8	Reel of 2500	BD42530EFJ-CE2
	TO252-J5	Reel of 2000	BD42530FPJ-CE2
	TO263-5	Reel of 500	BD42530FP2-CE2

© 2016 ROHM Co., Ltd. All rights reserved.

Pin Configurations

HTSOP-J8
(Top View)

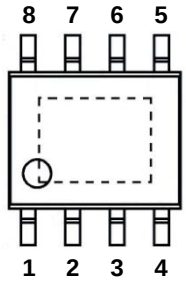

TO252-J5
(Top View)

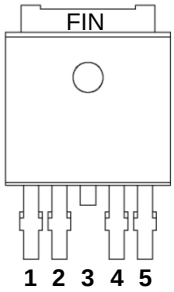

TO263-5
(Top View)

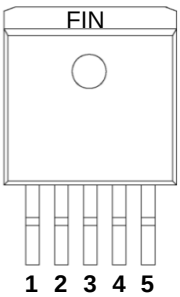

Pin Descriptions

HTSOP-J8 (Note 1), (Note 2), (Note 3)

Pin No.	Pin Name	Function
1	VO	Output
2	N.C.	Not connected
3	N.C.	Not connected
4	N.C.	Not connected
5	ADJ / EN	Output Control Voltage
6	GND	Ground
7	N.C.	Not connected
8	VCC	Input

Note 1: N.C. Pin is recommended to short with GND.
Note 2: N.C. Pin can be open because it isn't connect it inside of IC.
Note 3: Exposed die pad is connected to GND in the inside of IC.
Exposed die pad is need to be connected to GND of the board.

TO252-J5(Note 1)、(Note 2) / TO263-5 (Note 1)、(Note 2)

Pin No.	Pin Name	Function
1	VCC	Input
2	N.C.	Not connected
3	GND	Ground
4	ADJ / EN	Output Control Voltage
5	VO	Output
FIN	GND	Ground

© 2016 ROHM Co., Ltd. All rights reserved.

Block Diagrams

HTSOP-J8

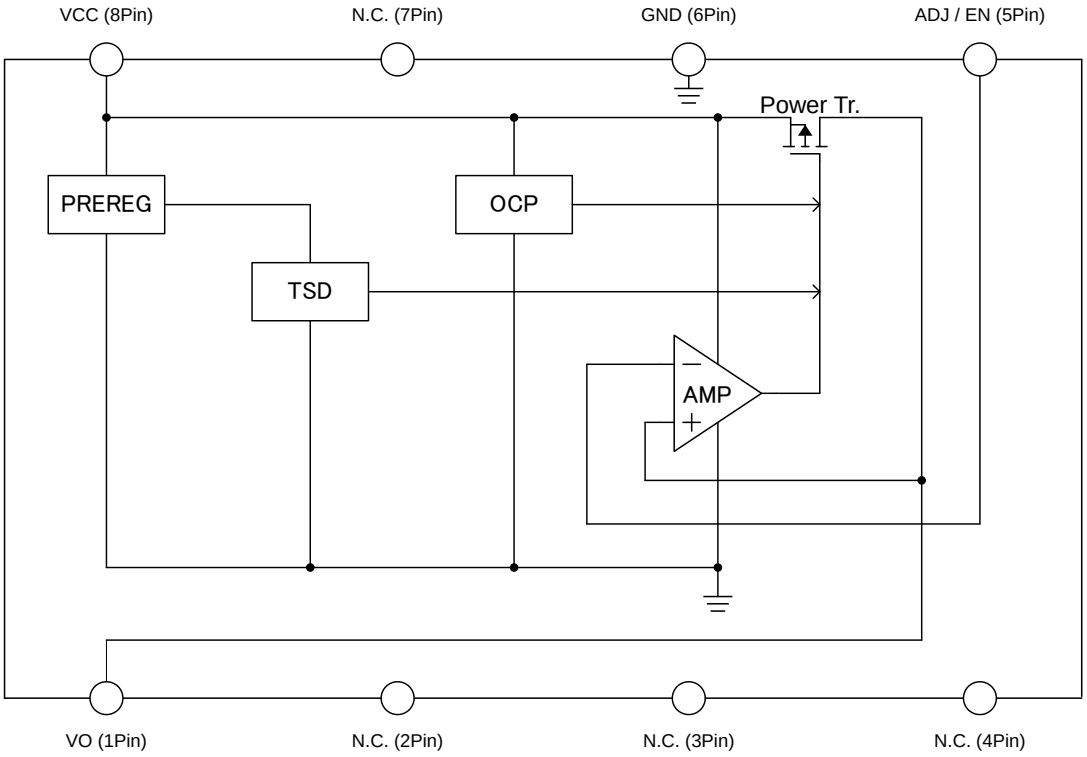

TO252-J5 / TO263-5

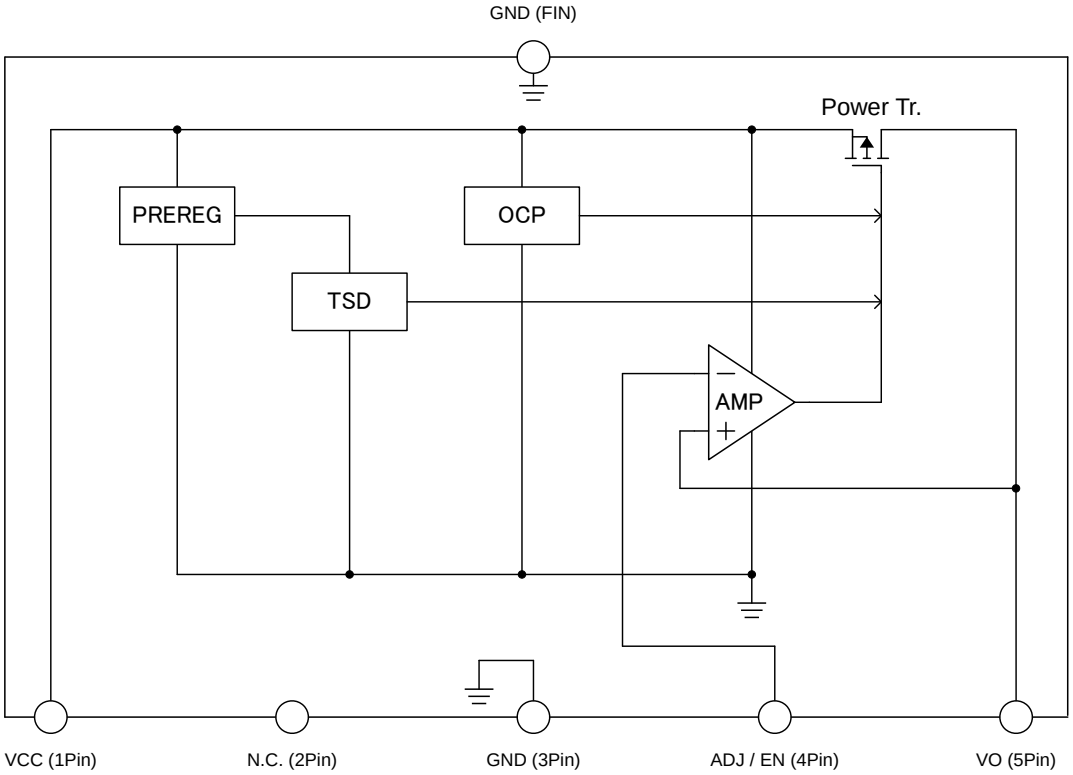

© 2016 ROHM Co., Ltd. All rights reserved.

Description of Blocks

Block Name	Function	Description of Blocks
PREREG	Internal Power Supply	Power Supply for Internal Circuit
TSD	Thermal Shutdown Protection	The TSD protect the device from overheating. If the chip temperature (Tj) reaches ca. 175 °C (Typ), the output is turned off.
OCP	Over Current Protection	The OCP protect the device from damage caused by over current. (Typ:650mA at 25°C)
AMP	Amplifier for the Power Transistor Drive	The amplifier drives output power transistor with ADJ/EN voltage as reference voltage.
Power Tr.	Output Power Transistor	PDMOS type output power transistor.

© 2016 ROHM Co., Ltd. All rights reserved.

Absolute Maximum Ratings

Parameter		Symbol	Ratings	Unit
Supply Voltage (Note 1)		V_{CC}	-0.3 to +45	V
Output Control Voltage		$V_{ADJ / EN}$	-0.3 to +28	V
Output Voltage		V_O	-0.3 to +28	V
Junction Temperature Range		Tj	-40 to +150	°C
Storage Temperature Range		Tstg	-55 to +150	°C
Maximum Junction Temperature		Tjmax	+150	°C
ESD withstand Voltage	HBM (Note 2)	$V_{ESD, HBM}$	±2000	V
	CDM (Note 3)	$V_{ESD, CDM}$	±1000	V

(Note 1) Do not exceed Junction Temperature.

(Note 2) Human Body Model.

(Note 3) Charged Device Model.

(Caution) Exceeding the absolute maximum rating for supply voltage, operating temperature or other parameters can result in damages to or destruction of the chip. In this event it also becomes impossible to determine the cause of the damage (e.g. short circuit, open circuit, etc.). Therefore, if any special mode is being considered with values expected to exceed the absolute maximum ratings, implementing physical safety measures, such as adding fuses, should be considered.

Operating Range (-40 °C ≤ Tj ≤ +150 °C)

Parameter	Symbol	Min	Max	Unit
Supply Voltage (Note 1)	V_{CC}	5.6	42	V
Tracking Voltage (Note 2)	$V_{ADJ / EN}$	2	16	V
Start-Up Voltage (Note 3)	V_{CC}	3	-	V
Output Current	I_O	0	250	mA
Ambient Temperature Range	Ta	-40	125	°C

(Note 1) $V_{ADJ/EN}$ = 5V, I_O = 200mA

(Note 2) $V_{ADJ/EN}$ ≤ Vcc – 0.5V

(Note 3) I_O = 0 mA.

Operating Conditions

Parameter	Symbol	Ratings			Unit	Condition
		Min	Typ	Max		
Input Capacitor	C_{IN}	1 (Note 4)	-	-	µF	Ceramic capacitor
Output Capacitor	C_O	4.7 (Note 4)	-	-	µF	Ceramic capacitor (Note 5)

(Note 4) The minimum value of capacitor must be met this specifications over full operating conditions.
(ex. Temperature, DC bias)

(Note 5) Electrolytic capacitor and tantalum capacitor can be used satisfying ESR of the stable operation range of the "output capacitor ESR vs. output current" of Figure 17.

© 2016 ROHM Co., Ltd. All rights reserved.

Thermal Resistance(Note 1)

Parameter	Symbol	Thermal Resistance (Typ)		Unit
		1s(Note 3)	2s2p(Note 4)	
HTSOP-J8				
Junction to Ambient	θ_{JA}	130	34	°C/W
Junction to Top Characterization Parameter(Note 2)	Ψ_{JT}	15	7	°C/W
TO252-J5				
Junction to Ambient	θ_{JA}	136	23	°C/W
Junction to Top Characterization Parameter(Note 2)	Ψ_{JT}	17	3	°C/W
TO263-5				
Junction to Ambient	θ_{JA}	81	21	°C/W
Junction to Top Characterization Parameter(Note 2)	Ψ_{JT}	8	2	°C/W

(Note 1)Based on JESD51-2A(Still-Air)
(Note 2)The thermal characterization parameter to report the difference between junction temperature and the temperature at the top center of the outside surface of the component package.
(Note 3)Using a PCB board based on JESD51-3.

Layer Number of Measurement Board	Material	Board Size
Single	FR-4	114.3mm x 76.2mm x 1.57mmt

Top	
Copper Pattern	Thickness
Footprints and Traces	70µm

(Note 4)Using a PCB board based on JESD51-7.

Layer Number of Measurement Board	Material	Board Size	Thermal Via(Note 5)	
			Pitch	Diameter
4 Layers	FR-4	114.3mm x 76.2mm x 1.6mmt	1.20mm	Φ0.30mm

Top		2 Internal Layers		Bottom	
Copper Pattern	Thickness	Copper Pattern	Thickness	Copper Pattern	Thickness
Footprints and Traces	70µm	74.2mm x 74.2mm	35µm	74.2mm x 74.2mm	70µm

(Note 5) This thermal via connects with the copper pattern of all layers.

© 2016 ROHM Co., Ltd. All rights reserved.

Electrical Characteristics

(Unless otherwise specified, -40 °C ≤ Tj ≤ +150 °C, V_{CC} = 13.5 V, $V_{ADJ / EN}$ = 5 V, I_O = 0 mA.
The Typical value is defined at Tj = 25 °C.)

Parameter	Symbol	Limit			Unit	Conditions
		Min	Typ	Max		
Circuit Current	I_{CC}	-	40	80	µA	Io ≤ 250 mA
Output Voltage Tracking Accuracy	ΔV_O	-10	-	10	mV	3.5V ≤ Vcc ≤ 32V 0.1 mA ≤ I_O ≤ 100 mA $V_{ADJ / EN}$ = 2V
		-10	-	10	mV	3.8V ≤ Vcc ≤ 32V 0.1 mA ≤ I_O ≤ 250 mA $V_{ADJ / EN}$ = 2V
		-10	-	10	mV	6V ≤ Vcc ≤ 32V 0.1 mA ≤ I_O ≤ 250 mA $V_{ADJ / EN}$ = 5V
Dropout Voltage	ΔVd	-	0.28	0.60	V	V_{CC} = V_O × 0.95 (= 4.75 V: Typ) I_O = 200 mA
Ripple Rejection	R.R.	-	80	-	dB	f = 120 Hz, ein = 1 Vrms I_O = 100 mA
Thermal Shut Down	TSD	-	175	-	°C	Tj at TSD ON

Electrical Characteristics (Output Control Function)

(Unless otherwise specified, -40 °C ≤ Tj ≤ +150 °C, V_{CC} = 13.5 V, Io = 0 mA. The Typical value is defined at Tj = 25 °C.)

Parameter	Symbol	Limit			Unit	Conditions
		Min	Typ	Max		
Shutdown Current	Ishut	-	1	5	µA	$V_{ADJ / EN}$ ≤ 0.4 V Tj ≤ 125 °C
ADJ / EN ON Mode Voltage	VthH	2	-	16	V	Active Mode
ADJ / EN OFF Mode Voltage	VthL	0	-	0.4	V	Off Mode
ADJ / EN Bias Current	$I_{ADJ / EN}$	-	1	3	µA	$V_{ADJ / EN}$=5 V

© 2016 ROHM Co., Ltd. All rights reserved.

Typical Performance Curves

Unless otherwise specified: -40 °C ≤ Tj ≤ +150 °C, V_{CC} = 13.5 V, $V_{ADJ/EN}$ = 5 V, Io = 0 mA.

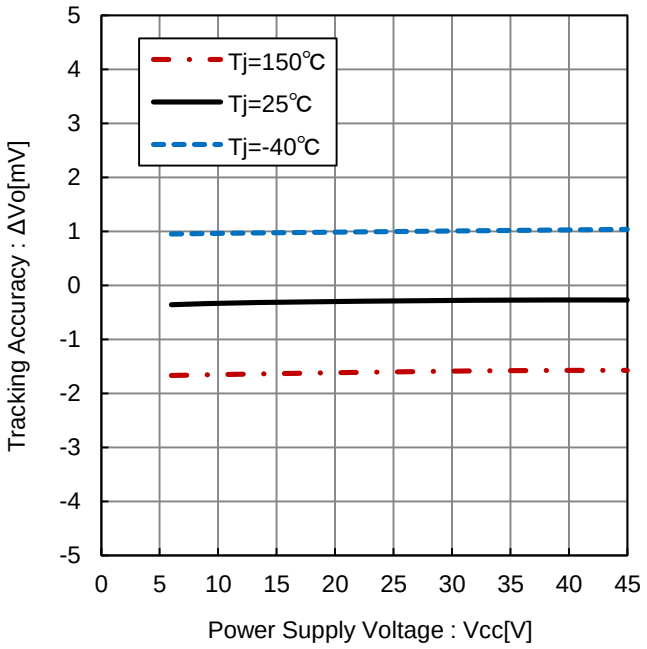

Figure 1. Tracking Accuracy vs. Power Supply Voltage

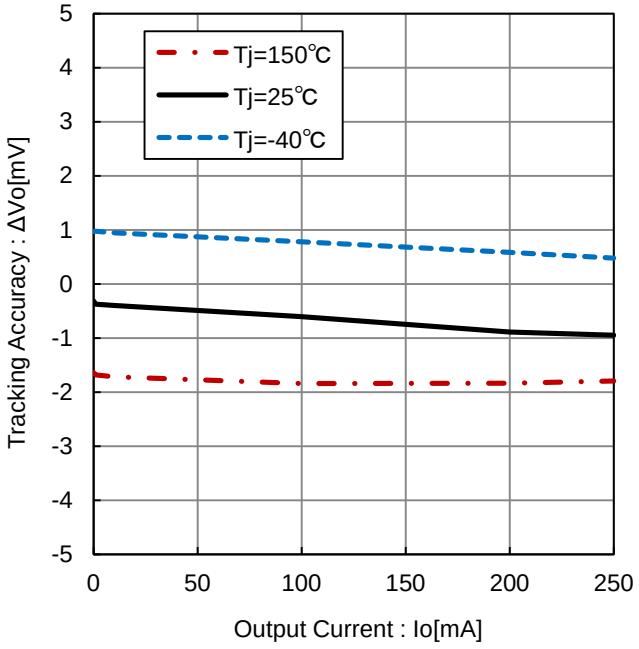

Figure 2. Tracking Accuracy vs. Output Current

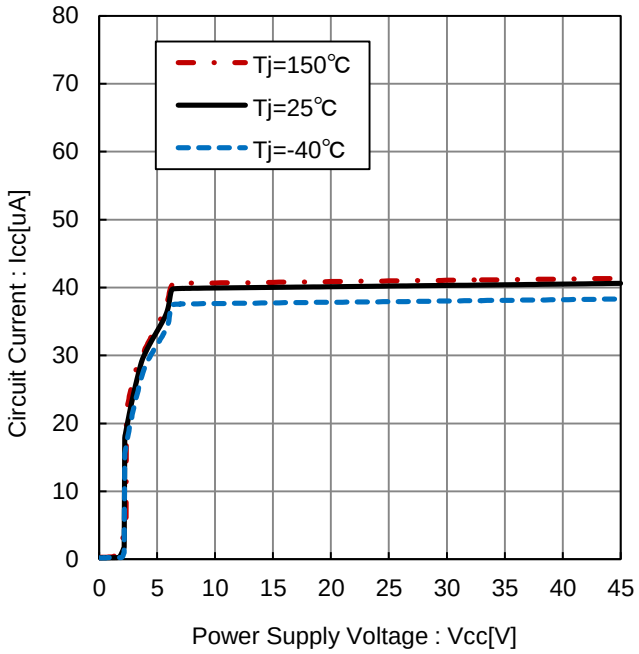

Figure 3. Circuit Current vs. Power Supply Voltage

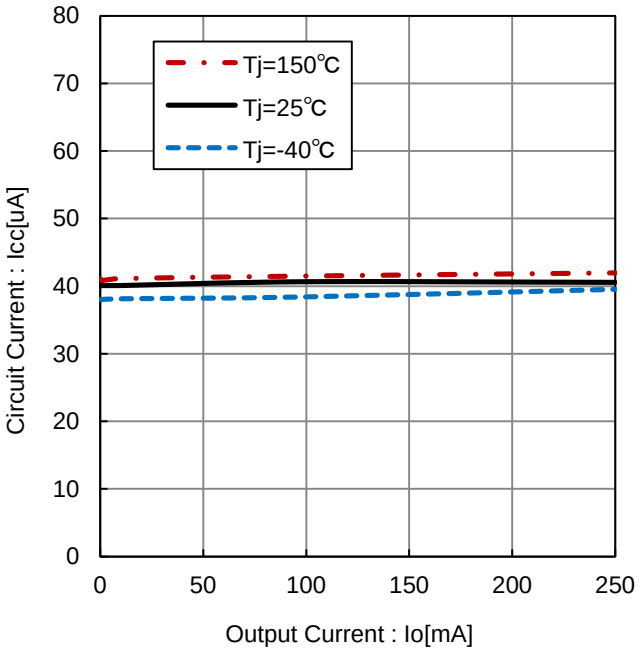

Figure 4. Circuit Current vs. Output Current

© 2016 ROHM Co., Ltd. All rights reserved.

Typical Performance Curves – continued

Unless otherwise specified: -40 °C ≤ Tj ≤ +150 °C, V_{CC} = 13.5 V, $V_{ADJ/EN}$ = 5 V, Io = 0 mA.

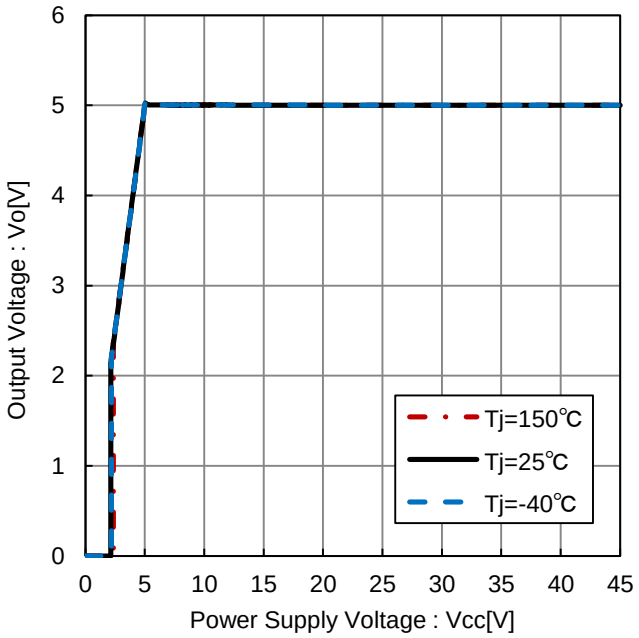

Figure 5. Output Voltage vs. Power Supply Voltage

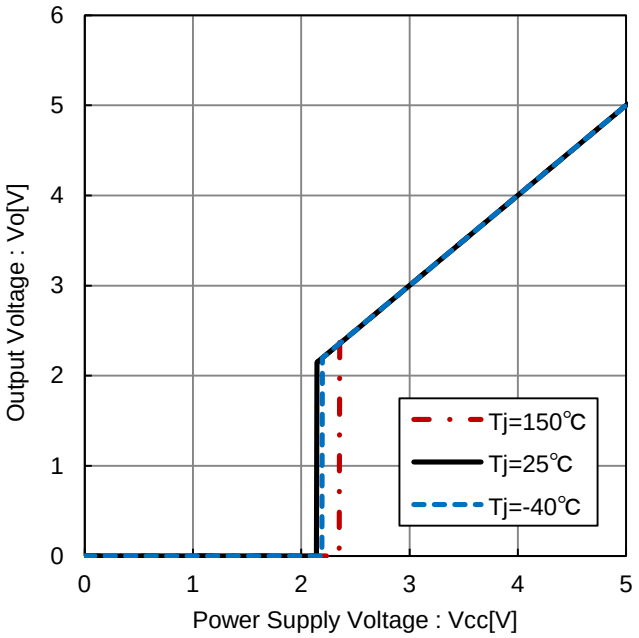

Figure 6. Output Voltage vs. Power Supply Voltage at Low Supply Voltage

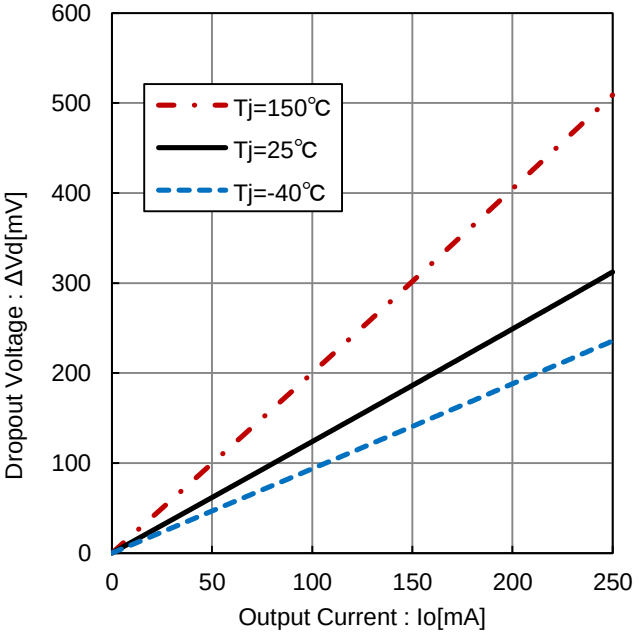

Figure 7. Dropout Voltage vs. Output Current (Vcc = 4.75V)

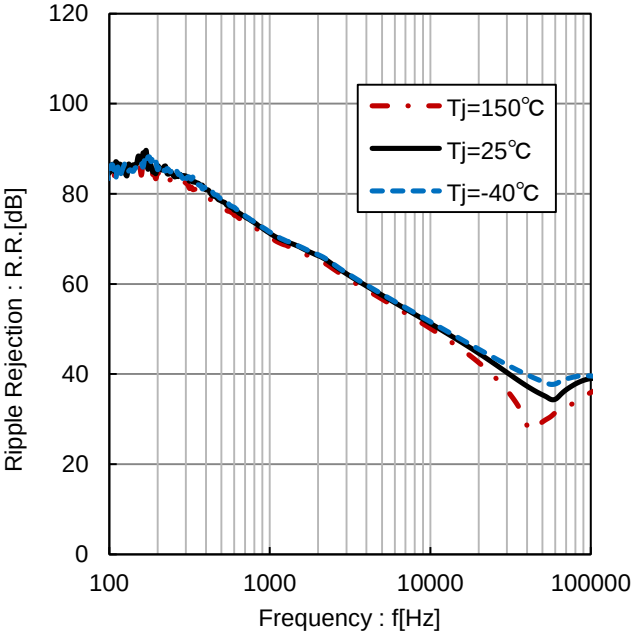

Figure 8. Ripple Rejection vs. Frequency (ein = 1Vrms, Io = 100mA)

© 2016 ROHM Co., Ltd. All rights reserved.

Typical Performance Curves – continued

Unless otherwise specified: -40 °C ≤ Tj ≤ +150 °C, V_{CC} = 13.5 V, $V_{ADJ/EN}$ = 5 V, Io = 0 mA.

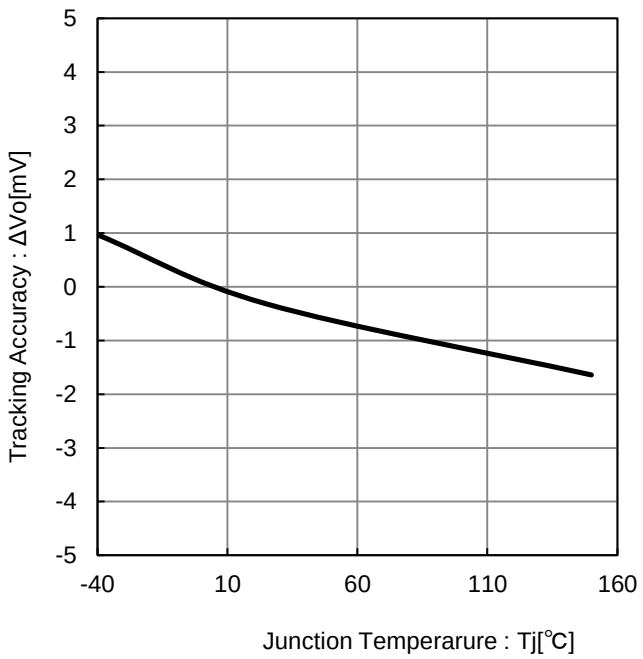

Figure 9. Tracking Accuracy vs. Junction Temperature (Io = 50mA)

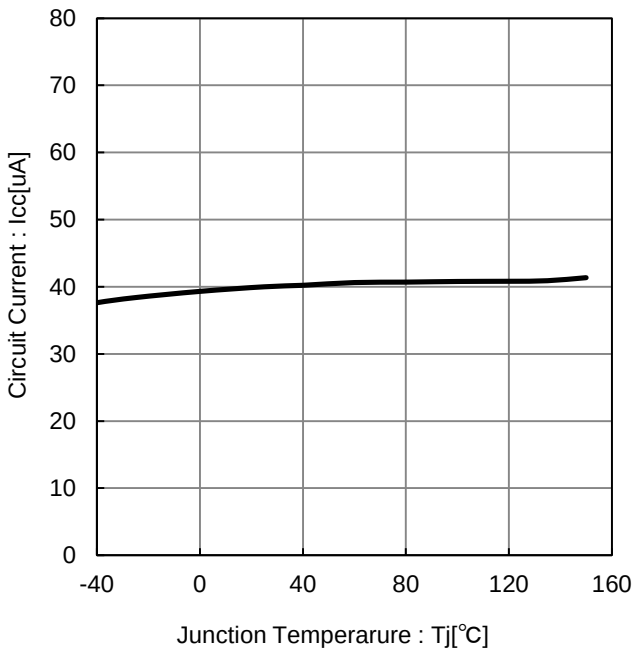

Figure 10. Circuit Current vs. Junction Temperature

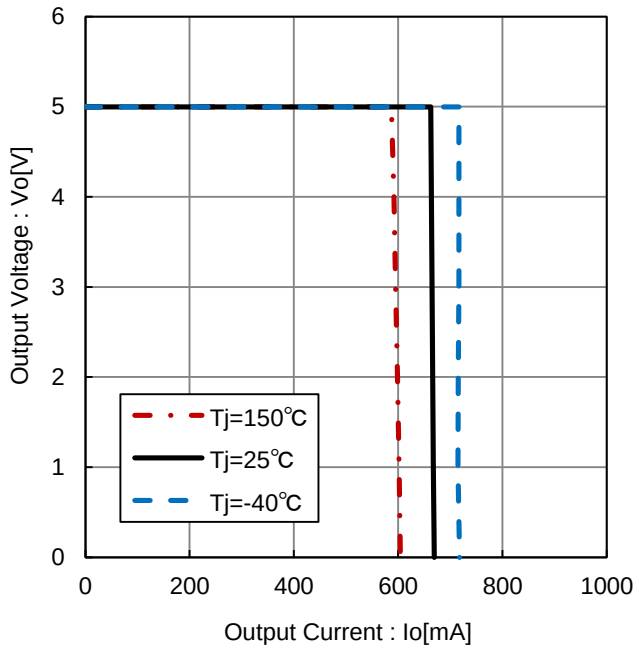

Figure 11. Output Voltage vs. Output Current (Over Current Protection)

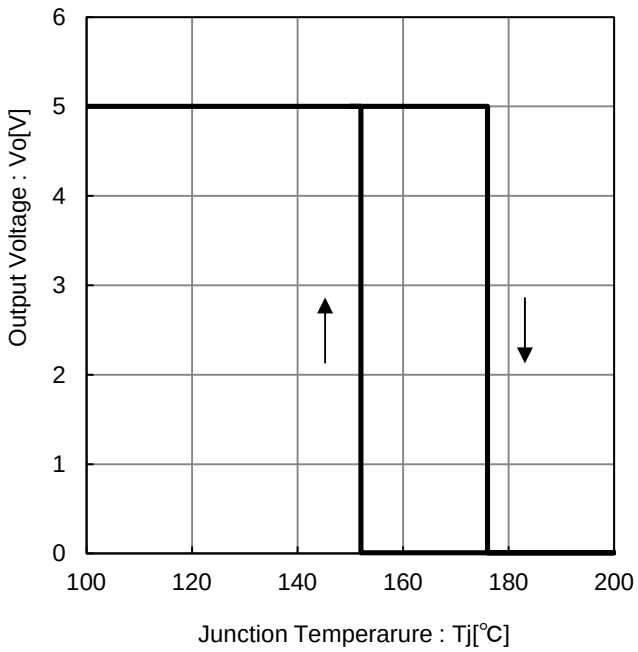

Figure 12. Output Voltage vs. Junction Temperature (Thermal Shut Down)

© 2016 ROHM Co., Ltd. All rights reserved.

Typical Performance Curves – continued

Unless otherwise specified: -40 °C ≤ Tj ≤ +150 °C, V_{CC} = 13.5 V, $V_{ADJ/EN}$ = 5 V, Io = 0 mA.

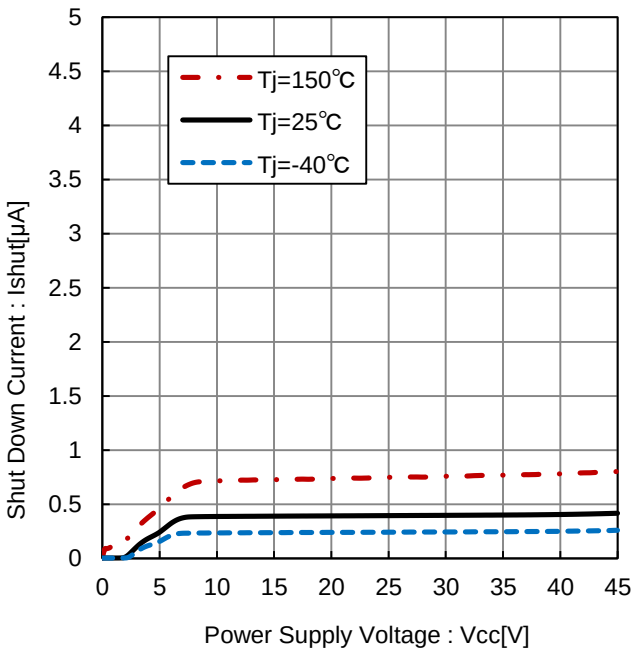

Figure 13. Shut Down Current vs. Power Supply Voltage

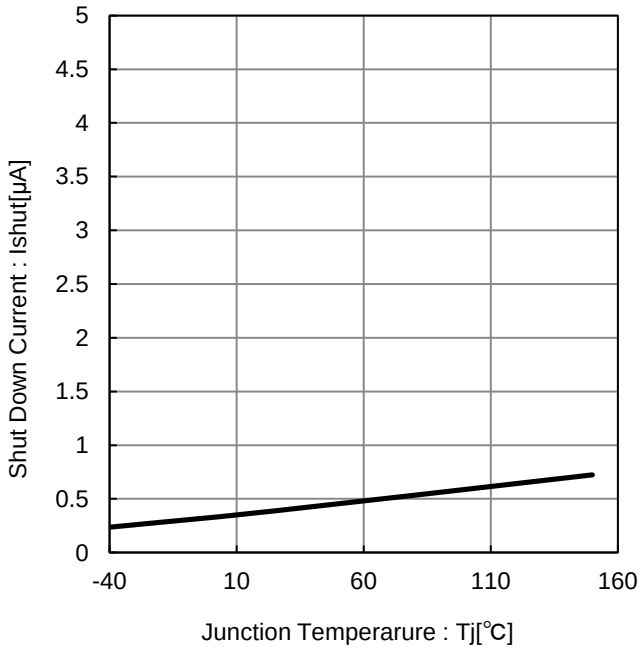

Figure 14. Shut Down Current vs. Junction Temperature

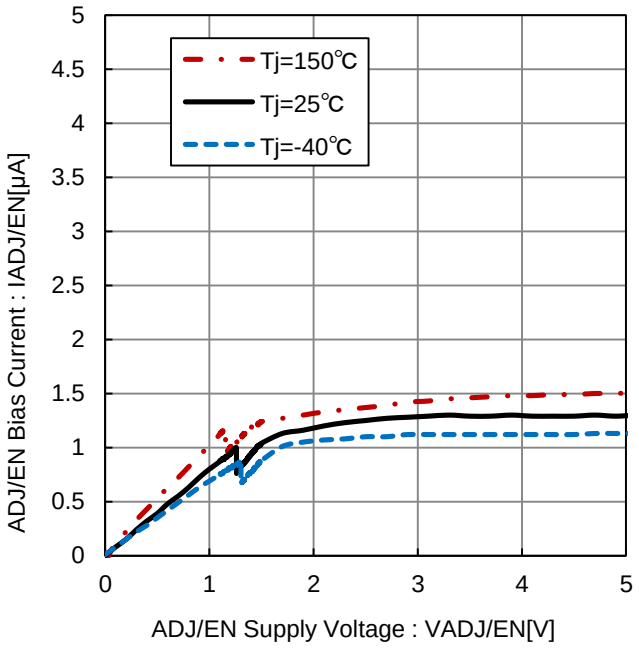

Figure 15. ADJ/EN Bias Current vs. ADJ/EN Supply Voltage

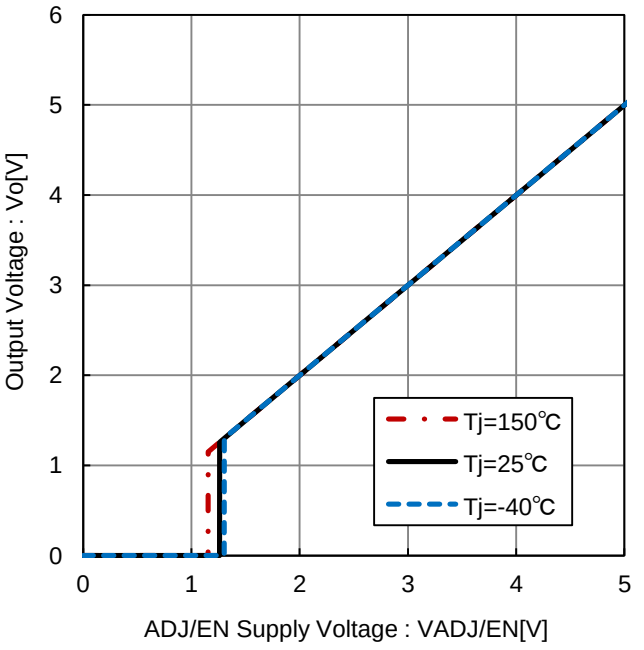

Figure 16. Output Voltage vs. ADJ/EN Supply Voltage

© 2016 ROHM Co., Ltd. All rights reserved.

Measurement Circuit

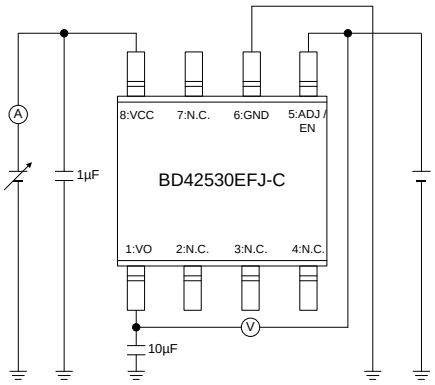

Measurement Setup for
Figure 1, 3, 10

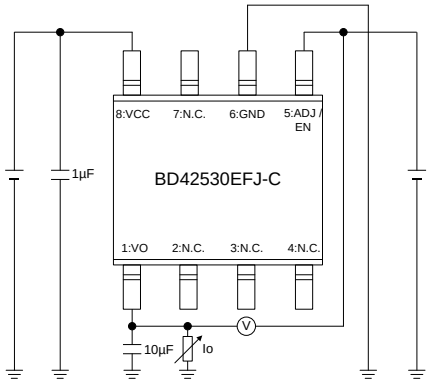

Measurement Setup for
Figure 2, 9

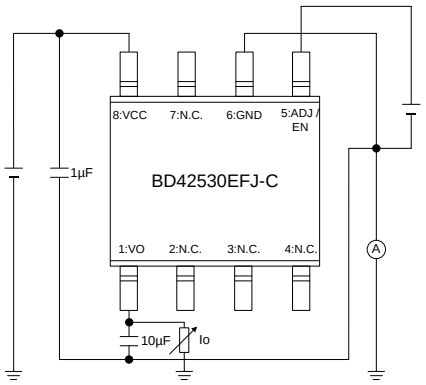

Measurement Setup for
Figure 4

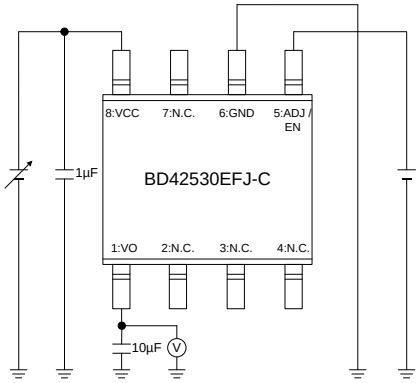

Measurement Setup for
Figure 5, 6, 12

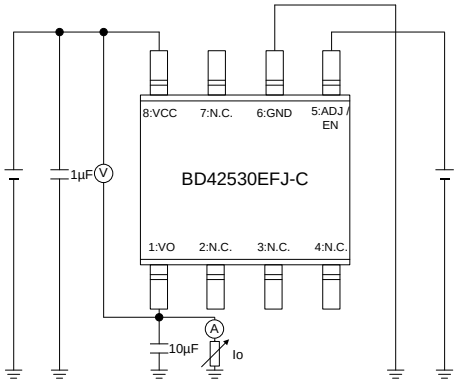

Measurement Setup for
Figure 7

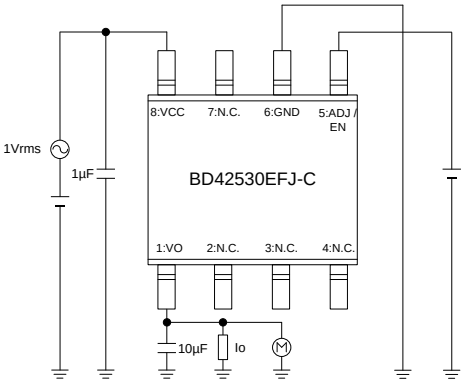

Measurement Setup for
Figure 8

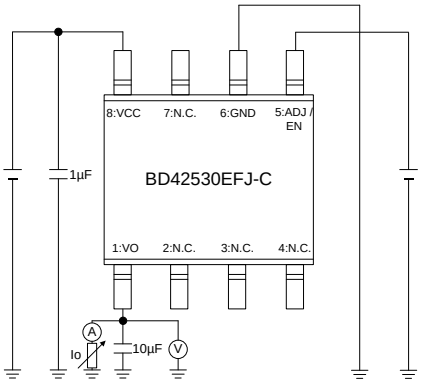

Measurement Setup for
Figure 11

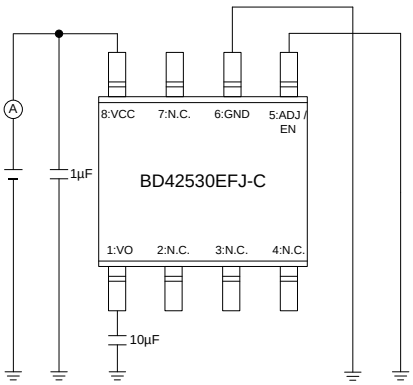

Measurement Setup for
Figure 13, 14

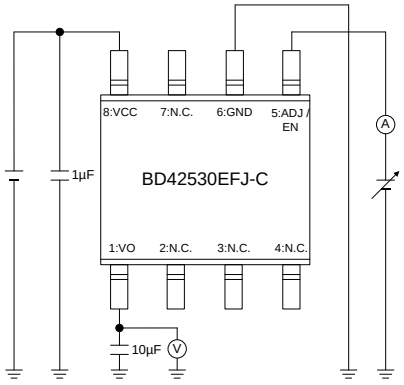

Measurement Setup for
Figure 15, 16

© 2016 ROHM Co., Ltd. All rights reserved.

Selection of Components Externally Connected

・VCC Pin
Insert Capacitors with a capacitance of 1 µF (Min) or higher between the VCC and GND. Choose the capacitance according to the line between the power smoothing circuit and the VCC. Selection of the capacitance also depends on the application. Verify the application and allow sufficient margins in the design. We recommend to mount the capacitor as close as possible to the pin. When selecting the capacitor, ensure that the capacitance of 1 µF or higher is maintained at the intended applied voltage and temperature range.

・Output Pin Capacitor
In order to prevent oscillation, a capacitor needs to be placed between the output pin and GND. We recommend using a capacitor with a capacitance of 4.7 µF (Min) or higher. Ceramic, Electrolytic and tantalum capacitors can be used. When selecting the capacitor, ensure that the capacitance of 4.7 µF or higher is maintained at the intended applied voltage and temperature range. Capacitance fluctuation due to changes in temperature can possibly result in oscillation. For selection of the capacitor refer to the data of Figure 18.
The stable operation range given in the data of Figure 17 is based on the standalone IC and resistive load. For actual applications the stable operating range is influenced by the PCB impedance, input supply impedance and load impedance. Therefore verification of the final operating environment is needed.
When selecting a ceramic type capacitor, we recommend using X5R, X7R or better with excellent temperature and DC-biasing characteristics and high voltage tolerance.
When the above-mentioned Output Pin Capacitor and the bypass capacitor for the rear stage may be connected in parallel, oscillation may occur due to the deterioration of phase characteristic depending on the ESR value of the Output Pin Capacitor. In such case, select ceramic capacitor of 4.7µF or more as the bypass capacitor. Or insert additional ceramic capacitor of 4.7µF or more.
Also, in case of rapidly changing input voltage and load current, select the capacitance in accordance with verifying that the actual application meets with the required specification. Mount the capacitor as close as possible to the connected pin.

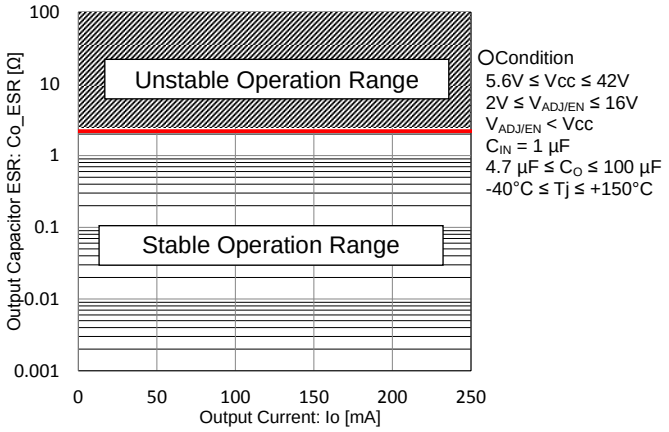

Figure 17. Output Pin Capacitor ESR vs Output Current

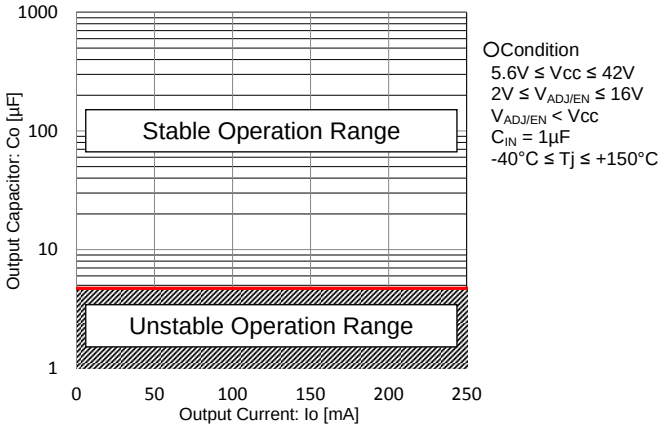

Figure 18. Output Pin Capacitor vs Output Current

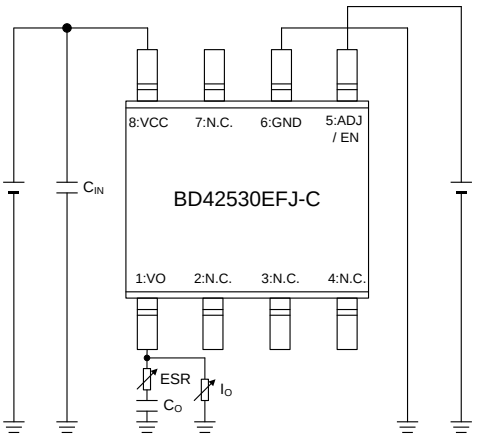

Figure 19. Measurement Setups for ESR Reference Data

© 2016 ROHM Co., Ltd. All rights reserved.

Power Dissipation

■HTSOP-J8

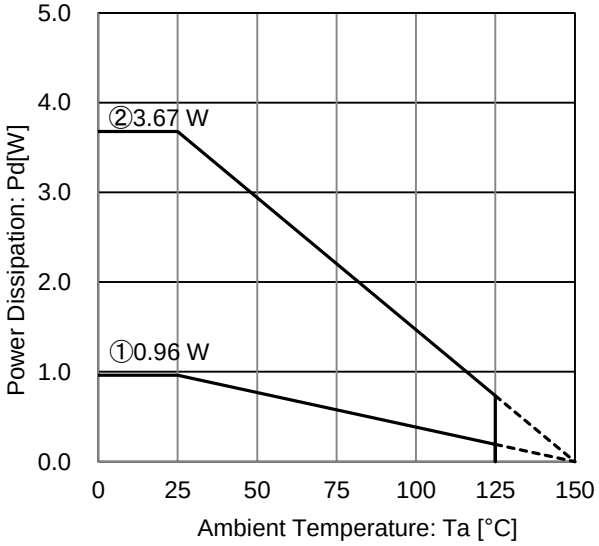

Figure 20. HTSOP-J8 Package Data

IC mounted on ROHM standard board based on JEDEC.

① : 1 - layer PCB
(Copper foil area on the reverse side of PCB: 0 mm x 0 mm)
Board material: FR4
Board size: 114.3 mm x 76.2 mm x 1.57 mmt
Mount condition: PCB and exposed pad are soldered.
Top copper foil: ROHM recommended
footprint + wiring to measure, 2 oz. copper.

② : 4 - layer PCB
(2 inner layers and Copper foil area on the reverse side of PCB: 74.2 mm x 74.2 mm)
Board material: FR4
Board size: 114.3 mm x 76.2 mm x 1.60 mmt
Mount condition: PCB and exposed pad are soldered.
Top copper foil: ROHM recommended
footprint + wiring to measure, 2 oz. copper.
2 inner layers copper foil area of PCB
: 74.2 mm x 74.2 mm, 1 oz. copper.
Copper foil area on the reverse side of PCB
: 74.2 mm x 74.2 mm, 2 oz. copper.

Condition①: θ_{JA} = 130 °C / W, Ψ_{JT} (top center) = 15 °C / W
Condition②: θ_{JA} = 34 °C / W, Ψ_{JT} (top center) = 7 °C / W

■TO252-J5

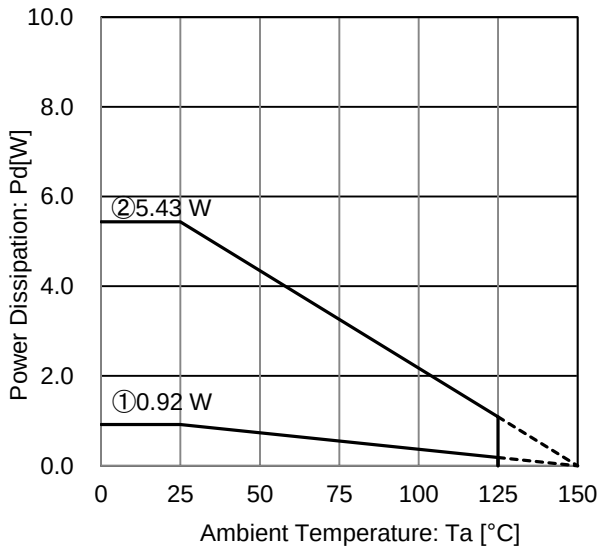

Figure 21. TO252-J5 Package Data

IC mounted on ROHM standard board based on JEDEC.

① : 1 - layer PCB
(Copper foil area on the reverse side of PCB: 0 mm x 0 mm)
Board material: FR4
Board size: 114.3 mm x 76.2 mm x 1.57 mmt
Mount condition: PCB and exposed pad are soldered.
Top copper foil: ROHM recommended
footprint + wiring to measure, 2 oz. copper.

② : 4 - layer PCB
(2 inner layers and Copper foil area on the reverse side of PCB: 74.2 mm x 74.2 mm)
Board material: FR4
Board size: 114.3 mm x 76.2 mm x 1.60 mmt
Mount condition: PCB and exposed pad are soldered.
Top copper foil: ROHM recommended
footprint + wiring to measure, 2 oz. copper.
2 inner layers copper foil area of PCB
: 74.2 mm x 74.2 mm, 1 oz. copper.
Copper foil area on the reverse side of PCB
: 74.2 mm x 74.2 mm, 2 oz. copper.

Condition①: θ_{JA} = 136 °C / W, Ψ_{JT} (top center) = 17 °C / W
Condition②: θ_{JA} = 23 °C / W, Ψ_{JT} (top center) = 3 °C / W

© 2016 ROHM Co., Ltd. All rights reserved.

Power Dissipation – continued

■TO263-5

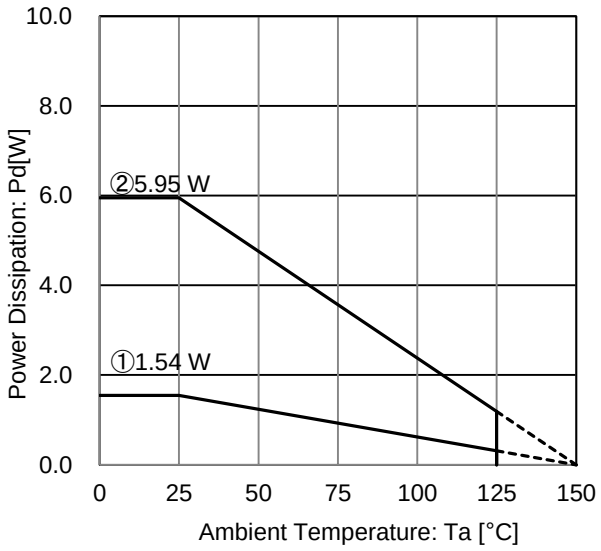

Figure 22. TO263-5 Package Data

IC mounted on ROHM standard board based on JEDEC.

① : 1 - layer PCB
(Copper foil area on the reverse side of PCB: 0 mm x 0 mm)
Board material: FR4
Board size: 114.3 mm x 76.2 mm x 1.57 mm
Mount condition: PCB and exposed pad are soldered.
Top copper foil: ROHM recommended
footprint + wiring to measure, 2 oz. copper.

② : 4 - layer PCB
(2 inner layers and Copper foil area on the reverse side of PCB: 74.2 mm x 74.2 mm)
Board material: FR4
Board size: 114.3 mm x 76.2 mm x 1.60 mm
Mount condition: PCB and exposed pad are soldered.
Top copper foil: ROHM recommended
footprint + wiring to measure, 2 oz. copper.
2 inner layers copper foil area of PCB
: 74.2 mm x 74.2 mm, 1 oz. copper.
Copper foil area on the reverse side of PCB
: 74.2 mm x 74.2 mm, 2 oz. copper.

Condition①: θ_{JA} = 81 °C / W, Ψ_{JT} (top center) = 8 °C / W
Condition②: θ_{JA} = 21 °C / W, Ψ_{JT} (top center) = 2 °C / W

© 2016 ROHM Co., Ltd. All rights reserved.

Thermal Design

Within this product, the power consumption is decided by the dropout voltage condition, the load current and the circuit current. Refer to Package Data illustrated in Figure 20, 21, 22 when using the IC in an environment of Ta ≥ 25 °C. Even if the ambient temperature Ta is at 25 °C, depending on the input voltage and the load current, chip junction temperature can be very high. Consider the design to be Tj ≤ Tjmax = 150 °C in all possible operating temperature range. On the reverse side of the package (HTSOP-J8, TO252-J5, TO263-5) there is exposed heat pad for improving the heat dissipation.
Should by any condition the maximum junction temperature Tjmax = 150 °C rating be exceeded by the temperature increase of the chip, it may result in deterioration of the properties of the chip. The thermal impedance in this specification is based on recommended PCB and measurement condition by JEDEC standard. Verify the application and allow sufficient margins in the thermal design by the following method is used to calculate the junction temperature Tj.
Tj can be calculated by either of the two following methods.

1. The following method is used to calculate the junction temperature Tj.

$$Tj = Ta + P_C \times \theta_{JA}$$

Where:
Tj : Junction Temperature
Ta : Ambient Temperature
P_C : Power Consumption
θ_{JA} : Thermal Impedance (Junction to Ambient)

2. The following method is also used to calculate the junction temperature Tj.

$$Tj = T_T + P_C \times \Psi_{JT}$$

Where:
Tj : Junction Temperature
T_T : Top Center of Case's (mold) Temperature
P_C : Power consumption
Ψ_{JT} : Thermal Impedance (Junction to Top Center of Case)

The following method is used to calculate the power consumption Pc (W).

$$Pc = (V_{CC} - V_O) \times I_O + V_{CC} \times I_{CC}$$

Where:
P_C : Power Consumption
V_{CC} : Input Voltage
V_O : Output Voltage
I_O : Load Current
I_{CC} : Circuit Current

© 2016 ROHM Co., Ltd. All rights reserved.

・Calculation Example (HTSOP-J8)

If V_{CC} = 13.5 V, V_O = 5.0 V, I_O = 50 mA, I_{CC} = 40 µA, the power consumption Pc can be calculated as follows:

$$P_C = (V_{CC} - V_O) \times I_O + V_{CC} \times I_{CC}$$
$$= (13.5\ V - 5.0\ V) \times 50\ mA + 13.5\ V \times 40\ \mu A$$
$$= 0.43\ W$$

At the ambient temperature Tamax = 125°C, the thermal Impedance (Junction to Ambient) θ_{JA} = 34 °C / W (4-layer PCB),

$$Tj = Tamax + P_C \times \theta_{JA}$$
$$= 125\ ℃ + 0.43\ W \times 34\ ℃ / W$$
$$= 139.6℃$$

When operating the IC, the top center of case's (mold) temperature T_T = 100 °C, Ψ_{JT} = 15 °C / W (1-layer PCB),

$$Tj = T_T + P_C \times \Psi_{JT}$$
$$= 100\ ℃ + 0.43\ W \times 15\ ℃ / W$$
$$= 106.5\ ℃$$

For optimum thermal performance, it is recommended to expand the copper foil area of the board, increasing the layer and thermal via between thermal land pad.

© 2016 ROHM Co., Ltd. All rights reserved.

Application Examples

・Applying positive surge to the VCC

If the possibility exists that surges higher than 45 V will be applied to the VCC, a Zener Diode should be placed between the VCC and GND as shown in the figure below.

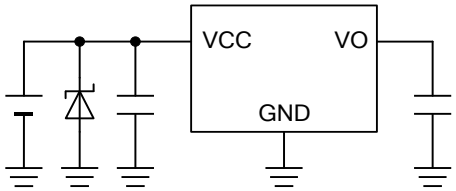

・Applying negative surge to the VCC

If the possibility exists that negative surges lower than the GND are applied to the VCC, a Shottky Diode should be place between the VCC and GND as shown in the figure below.

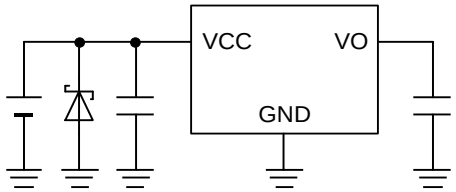

・Implementing a Protection Diode

If the possibility exists that a large inductive load is connected to the output pin resulting in back-EMF at time of startup and shutdown, a protection diode should be placed as shown in the figure below.

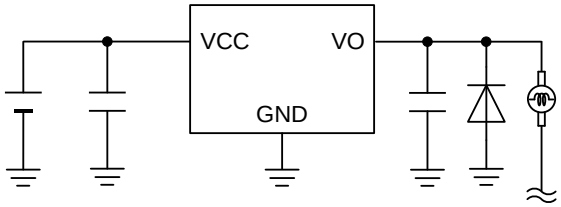

・Reverse Polarity Protection Diode

In some applications, the VCC and pin potential might be reversed, possibly resulting in damage to internal circuit or damage to the element. In instance, when VCC shorts to GND while external capacitor at VO is charged.

Reverse current in case of point A described in below diagram can be prevented by inserting Reverse polarity protection diode in series to the VCC.

When a short of the point B and the GND is concerned after having reverse polarity protection diode inserted, we recommend inserting a bypass diode between the VCC and the VO.

If the reverse polarity protection diode and bypass diode cannot be inserted due to any reasons, use a capacitor with a capacitance with less than 1000µF at $V_{ADJ / EN}$ = 5V and 100µF at $V_{ADJ / EN}$ = 16V to avoid damage to the internal circuits or the elements.

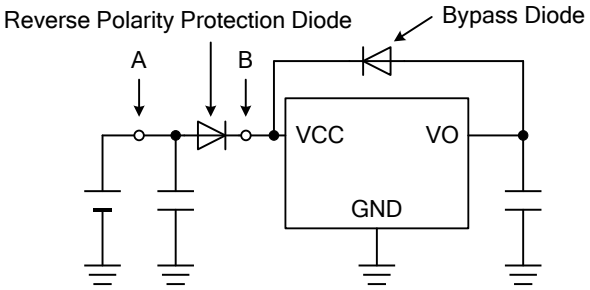

© 2016 ROHM Co., Ltd. All rights reserved.

I/O equivalence circuits

1 VCC	2 ADJ/EN	3 VO
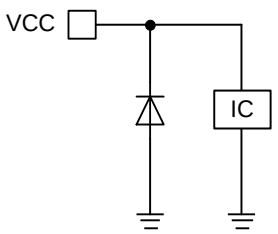	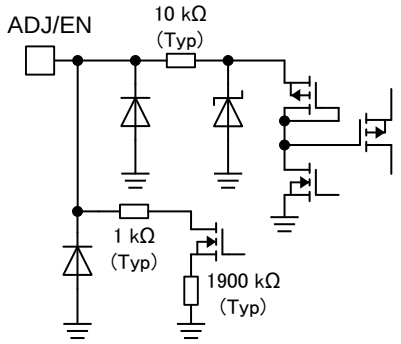	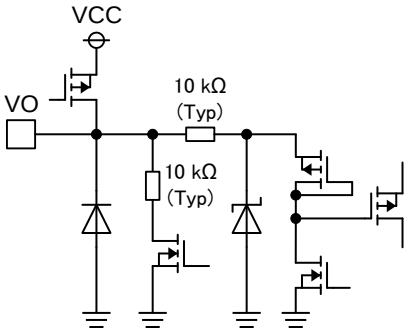

© 2016 ROHM Co., Ltd. All rights reserved.

Operational Notes

1. **Reverse Connection of Power Supply**
   Connecting the power supply in reverse polarity can damage the IC. Take precautions against reverse polarity when connecting the power supply, such as mounting an external diode between the power supply and the IC's power supply pins.

2. **Power Supply Lines**
   Design the PCB layout pattern to provide low impedance supply lines. Furthermore, connect a capacitor to ground at all power supply pins. Consider the effect of temperature and aging on the capacitance value when using electrolytic capacitors.

3. **Ground Voltage**
   Ensure that no pins are at a voltage below that of the ground pin at any time, even during transient condition.

4. **Ground Wiring Pattern**
   When using both small-signal and large-current ground traces, the two ground traces should be routed separately but connected to a single ground at the reference point of the application board to avoid fluctuations in the small-signal ground caused by large currents. Also ensure that the ground traces of external components do not cause variations on the ground voltage. The ground lines must be as short and thick as possible to reduce line impedance.

5. **Thermal Consideration**
   Should by any chance the maximum junction temperature rating be exceeded the rise in temperature of the chip may result in deterioration of the properties of the chip. In case of exceeding this absolute maximum rating, increase the board size and copper area to prevent exceeding the maximum junction temperature rating.

6. **Recommended Operating Conditions**
   These conditions represent a range within which the expected characteristics of the IC can be approximately obtained. The electrical characteristics are guaranteed under the conditions of each parameter.

7. **Inrush Current**
   When power is first supplied to the IC, it is possible that the internal logic may be unstable and inrush current may flow instantaneously due to the internal powering sequence and delays, especially if the IC has more than one power supply. Therefore, give special consideration to power coupling capacitance, power wiring, width of ground wiring, and routing of connections.

8. **Testing on Application Boards**
   When testing the IC on an application board, connecting a capacitor directly to a low-impedance output pin may subject the IC to stress. Always discharge capacitors completely after each process or step. The IC's power supply should always be turned off completely before connecting or removing it from the test setup during the inspection process. To prevent damage from static discharge, ground the IC during assembly and use similar precautions during transport and storage.

9. **Inter-pin Short and Mounting Errors**
   Ensure that the direction and position are correct when mounting the IC on the PCB. Incorrect mounting may result in damaging the IC. Avoid nearby pins being shorted to each other especially to ground, power supply and output pin. Inter-pin shorts could be due to many reasons such as metal particles, water droplets (in very humid environment) and unintentional solder bridge deposited in between pins during assembly to name a few.

10. **Unused Input Terminals**
    Input pins of an IC are often connected to the gate of a MOS transistor. The gate has extremely high impedance and extremely low capacitance. If left unconnected, the electric field from the outside can easily charge it. The small charge acquired in this way is enough to produce a significant effect on the conduction through the transistor and cause unexpected operation of the IC. So unless otherwise specified, unused input pins should be connected to the power supply or ground line.

© 2016 ROHM Co., Ltd. All rights reserved.

Operational Notes – continued

11. Regarding the Input Pin of the IC

This monolithic IC contains P+ isolation and P substrate layers between adjacent elements in order to keep them isolated. P-N junctions are formed at the intersection of the P layers with the N layers of other elements, creating a parasitic diode or transistor. For example (refer to figure below):

When GND > Pin A and GND > Pin B, the P-N junction operates as a parasitic diode.
When GND > Pin B, the P-N junction operates as a parasitic transistor.

Parasitic diodes inevitably occur in the structure of the IC. The operation of parasitic diodes can result in mutual interference among circuits, operational faults, or physical damage. Therefore, conditions that cause these diodes to operate, such as applying a voltage lower than the GND voltage to an input pin (and thus to the P substrate) should be avoided.

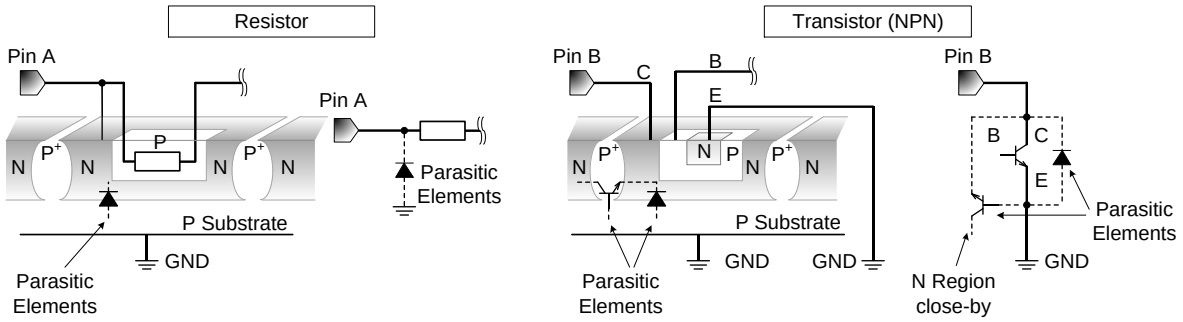

12. Ceramic Capacitor

When using a ceramic capacitor, determine the dielectric constant considering the change of capacitance with temperature and the decrease in nominal capacitance due to DC bias and others.

13. Thermal Shutdown Circuit(TSD)

This IC has a built-in thermal shutdown circuit that prevents heat damage to the IC. Normal operation should always be within the IC's maximum junction temperature rating. If however the rating is exceeded for a continued period, the junction temperature (Tj) will rise which will activate the TSD circuit that will turn OFF all output pins. When the Tj falls below the TSD threshold, the circuits are automatically restored to normal operation.
Note that the TSD circuit operates in a situation that exceeds the absolute maximum ratings and therefore, under no circumstances, should the TSD circuit be used in a set design or for any purpose other than protecting the IC from heat damage.

14. Over Current Protection Circuit (OCP)

This IC incorporates an integrated overcurrent protection circuit that is activated when the load is shorted. This protection circuit is effective in preventing damage due to sudden and unexpected incidents. However, the IC should not be used in applications characterized by continuous operation or transitioning of the protection circuit.

© 2016 ROHM Co., Ltd. All rights reserved.

Physical Dimension, Tape and Reel Information (HTSOP-J8)

Package Name	HTSOP-J8

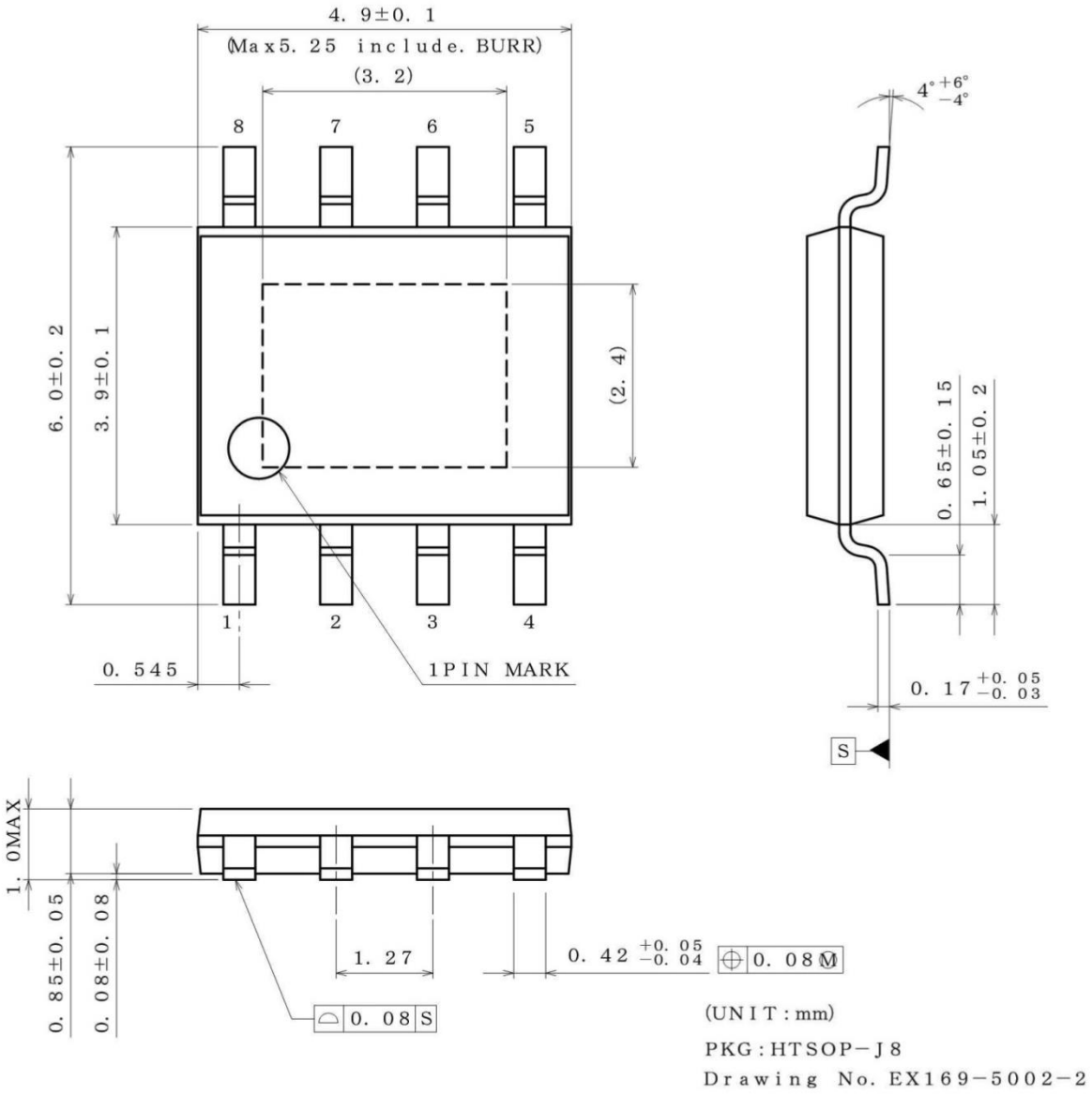

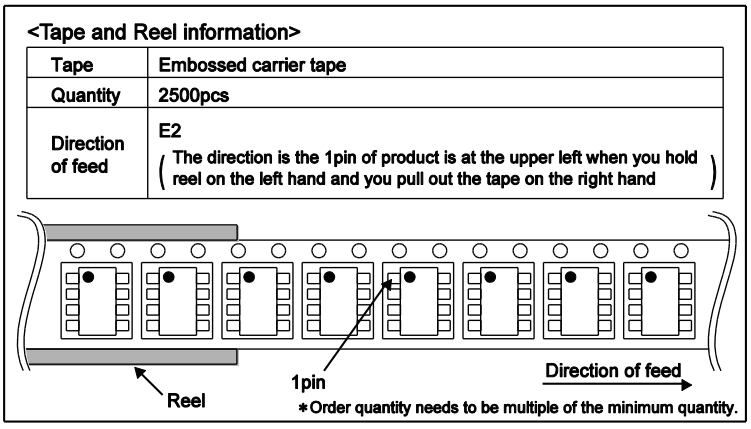

© 2016 ROHM Co., Ltd. All rights reserved.

Physical Dimension, Tape and Reel Information(TO252-J5)

Package Name	TO252-J5

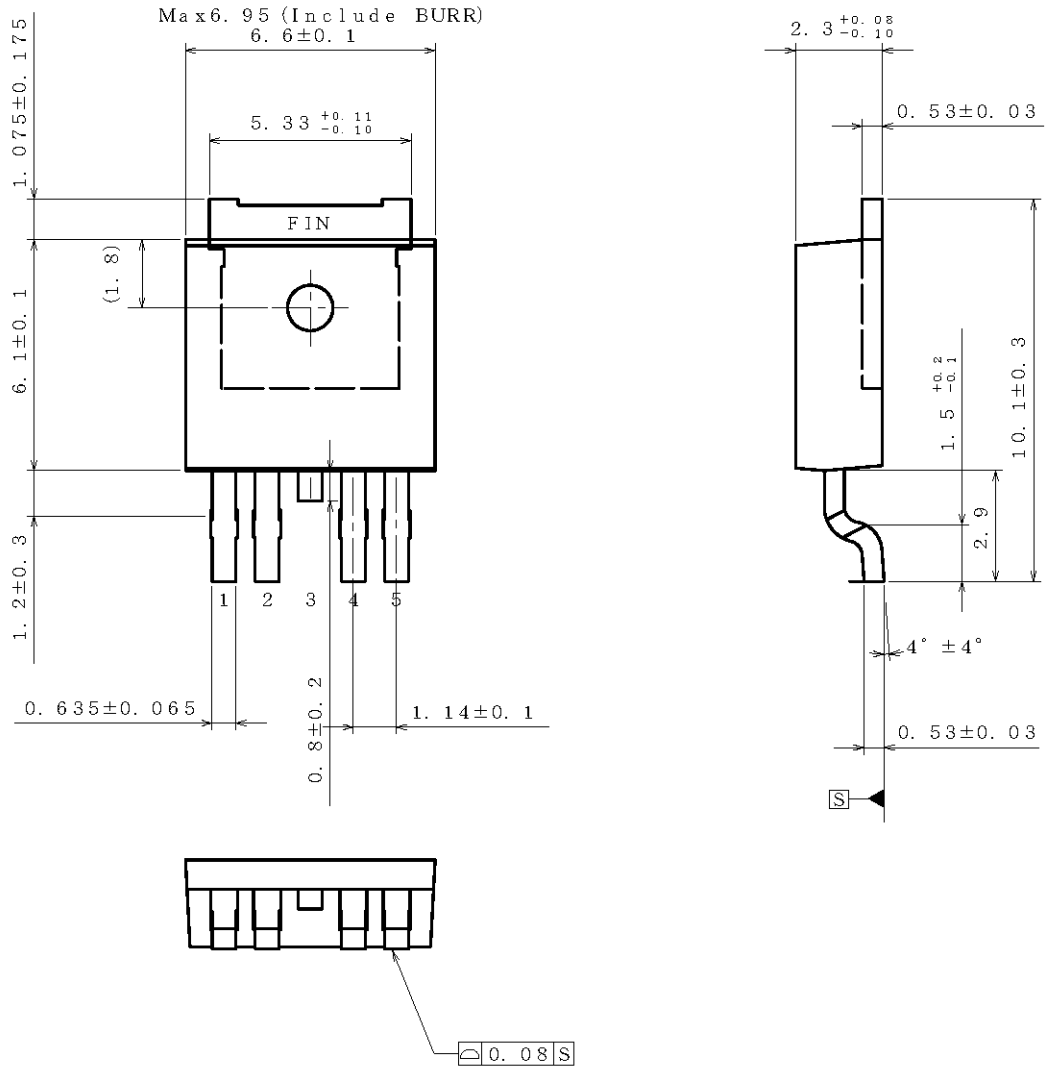

(UNIT : mm)

PKG : TO252−J5
Drawing No. EX575−5002

< Tape and Reel Information >

Tape	Embossed carrier tape with dry pack
Quantity	2000pcs
Direction of feed	E2 The direction is the pin 1 of product is at the lower left when you hold reel on the left hand and you pull out the tape on the right hand

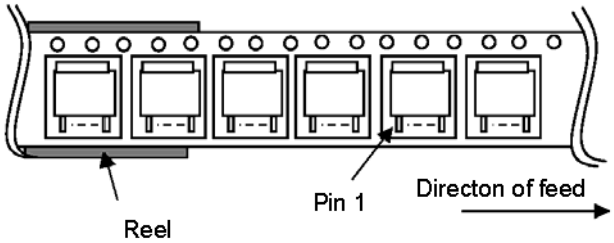

*Order quantity needs to be multiple of the minimum quantity.

© 2016 ROHM Co., Ltd. All rights reserved.

Physical Dimension, Tape and Reel Information (TO263-5)

Package Name	TO263-5

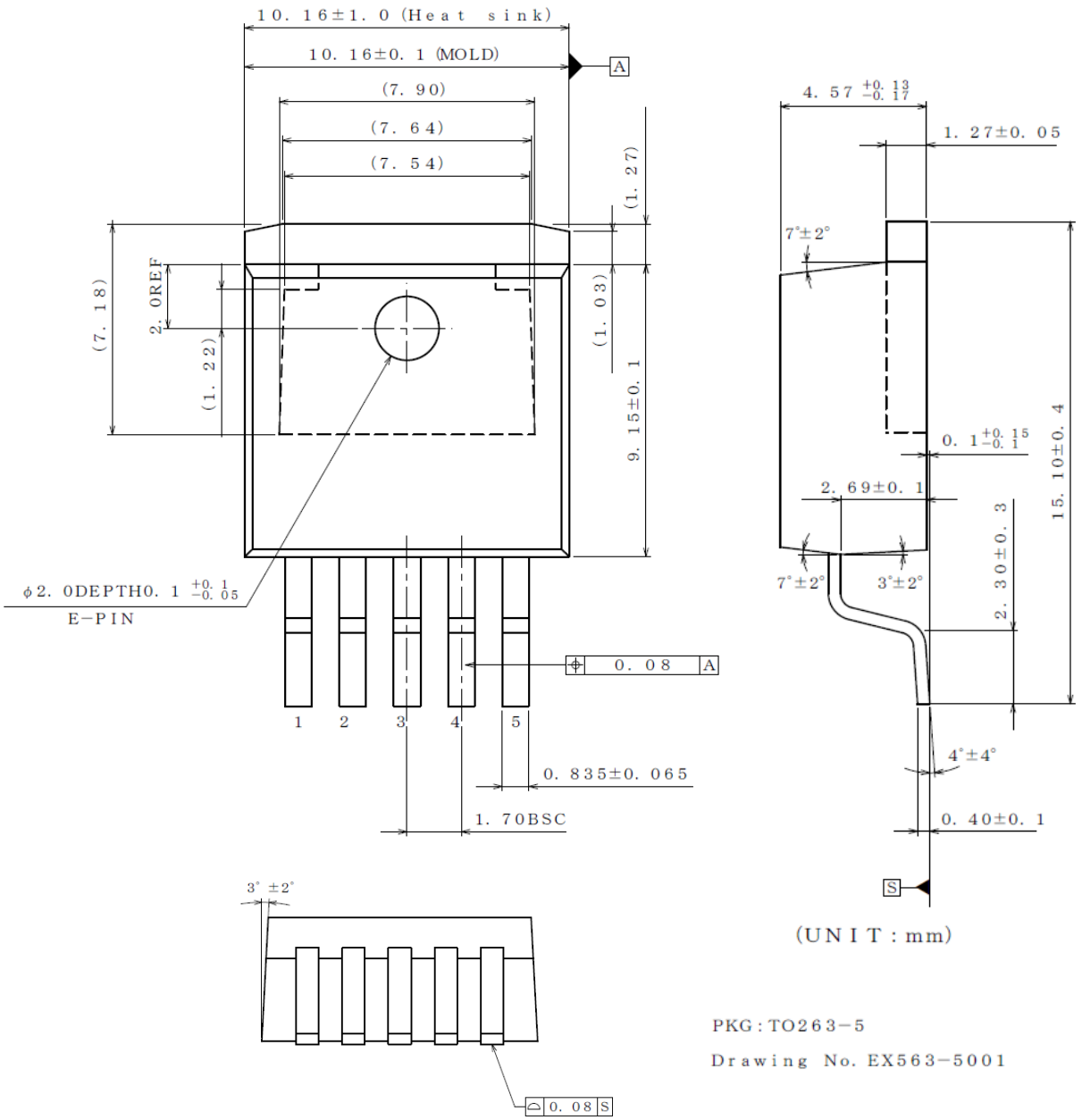

< Tape and Reel Information >

Tape	Embossed carrier tape
Quantity	500pcs
Direction of feed	E2 The direction is the pin 1 of product is at the lower left when you hold reel on the left hand and you pull out the tape on the right hand

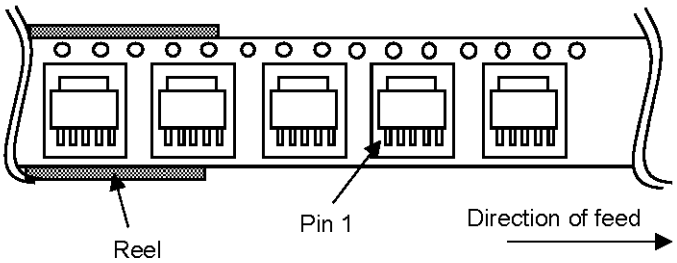

© 2016 ROHM Co., Ltd. All rights reserved.

Marking Diagrams (Top View)

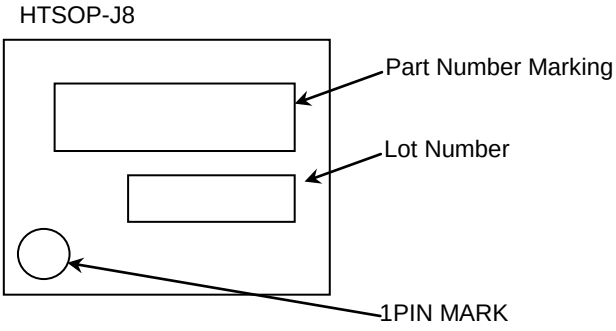

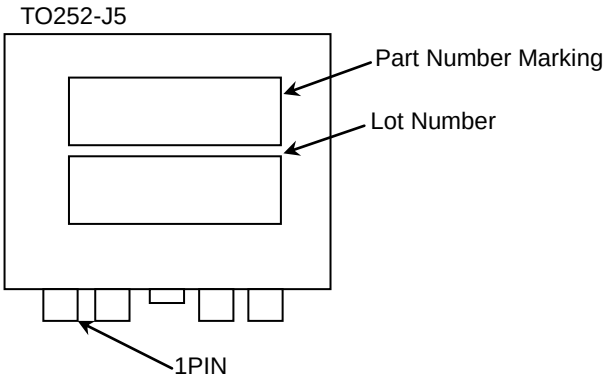

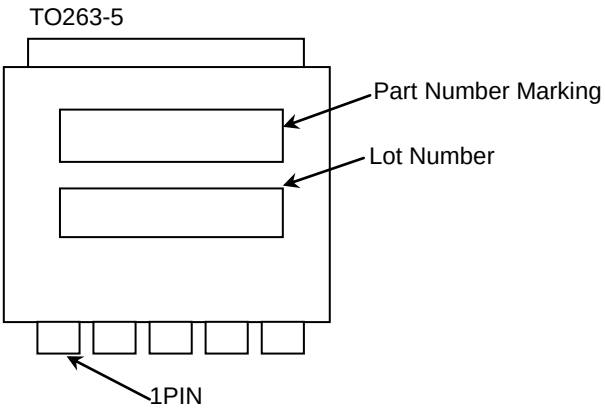

Part Number	Package	Part Number Marking
BD42530EFJ-C	HTSOP-J8	42530
BD42530FPJ-C	TO252-J5	BD42530
BD42530FP2-C	TO263-5	BD42530

© 2016 ROHM Co., Ltd. All rights reserved.

Revision History

Date	Revision	Changes
20.Apr.2016	001	New Release
1.Dec.2016	002	Page 1, 6 and 14, change value of minimum output capacitor and maximum ESR Page 1, 6 and 14, add comment of [recommended ceramic capacitor for output pin] Page 7, change format for Thermal Resistance
29.Dec.2016	003	Add TO252-J5 Package

© 2016 ROHM Co., Ltd. All rights reserved.

Notice

Precaution on using ROHM Products

1. If you intend to use our Products in devices requiring extremely high reliability (such as medical equipment (Note 1), aircraft/spacecraft, nuclear power controllers, etc.) and whose malfunction or failure may cause loss of human life, bodily injury or serious damage to property ("Specific Applications"), please consult with the ROHM sales representative in advance. Unless otherwise agreed in writing by ROHM in advance, ROHM shall not be in any way responsible or liable for any damages, expenses or losses incurred by you or third parties arising from the use of any ROHM's Products for Specific Applications.

(Note1) Medical Equipment Classification of the Specific Applications

JAPAN	USA	EU	CHINA
CLASSⅢ	CLASSⅢ	CLASSⅡb	CLASSⅢ
CLASSⅣ		CLASSⅢ	

2. ROHM designs and manufactures its Products subject to strict quality control system. However, semiconductor products can fail or malfunction at a certain rate. Please be sure to implement, at your own responsibilities, adequate safety measures including but not limited to fail-safe design against the physical injury, damage to any property, which a failure or malfunction of our Products may cause. The following are examples of safety measures:
   [a] Installation of protection circuits or other protective devices to improve system safety
   [b] Installation of redundant circuits to reduce the impact of single or multiple circuit failure

3. Our Products are not designed under any special or extraordinary environments or conditions, as exemplified below. Accordingly, ROHM shall not be in any way responsible or liable for any damages, expenses or losses arising from the use of any ROHM's Products under any special or extraordinary environments or conditions. If you intend to use our Products under any special or extraordinary environments or conditions (as exemplified below), your independent verification and confirmation of product performance, reliability, etc, prior to use, must be necessary:
   [a] Use of our Products in any types of liquid, including water, oils, chemicals, and organic solvents
   [b] Use of our Products outdoors or in places where the Products are exposed to direct sunlight or dust
   [c] Use of our Products in places where the Products are exposed to sea wind or corrosive gases, including Cl_2, H_2S, NH_3, SO_2, and NO_2
   [d] Use of our Products in places where the Products are exposed to static electricity or electromagnetic waves
   [e] Use of our Products in proximity to heat-producing components, plastic cords, or other flammable items
   [f] Sealing or coating our Products with resin or other coating materials
   [g] Use of our Products without cleaning residue of flux (even if you use no-clean type fluxes, cleaning residue of flux is recommended); or Washing our Products by using water or water-soluble cleaning agents for cleaning residue after soldering
   [h] Use of the Products in places subject to dew condensation

4. The Products are not subject to radiation-proof design.

5. Please verify and confirm characteristics of the final or mounted products in using the Products.

6. In particular, if a transient load (a large amount of load applied in a short period of time, such as pulse. is applied, confirmation of performance characteristics after on-board mounting is strongly recommended. Avoid applying power exceeding normal rated power; exceeding the power rating under steady-state loading condition may negatively affect product performance and reliability.

7. De-rate Power Dissipation depending on ambient temperature. When used in sealed area, confirm that it is the use in the range that does not exceed the maximum junction temperature.

8. Confirm that operation temperature is within the specified range described in the product specification.

9. ROHM shall not be in any way responsible or liable for failure induced under deviant condition from what is defined in this document.

Precaution for Mounting / Circuit board design

1. When a highly active halogenous (chlorine, bromine, etc.) flux is used, the residue of flux may negatively affect product performance and reliability.

2. In principle, the reflow soldering method must be used on a surface-mount products, the flow soldering method must be used on a through hole mount products. If the flow soldering method is preferred on a surface-mount products, please consult with the ROHM representative in advance.

For details, please refer to ROHM Mounting specification

© 2015 ROHM Co., Ltd. All rights reserved.

Precautions Regarding Application Examples and External Circuits

1. If change is made to the constant of an external circuit, please allow a sufficient margin considering variations of the characteristics of the Products and external components, including transient characteristics, as well as static characteristics.

2. You agree that application notes, reference designs, and associated data and information contained in this document are presented only as guidance for Products use. Therefore, in case you use such information, you are solely responsible for it and you must exercise your own independent verification and judgment in the use of such information contained in this document. ROHM shall not be in any way responsible or liable for any damages, expenses or losses incurred by you or third parties arising from the use of such information.

Precaution for Electrostatic

This Product is electrostatic sensitive product, which may be damaged due to electrostatic discharge. Please take proper caution in your manufacturing process and storage so that voltage exceeding the Products maximum rating will not be applied to Products. Please take special care under dry condition (e.g. Grounding of human body / equipment / solder iron, isolation from charged objects, setting of Ionizer, friction prevention and temperature / humidity control).

Precaution for Storage / Transportation

1. Product performance and soldered connections may deteriorate if the Products are stored in the places where:
   [a] the Products are exposed to sea winds or corrosive gases, including Cl2, H2S, NH3, SO2, and NO2
   [b] the temperature or humidity exceeds those recommended by ROHM
   [c] the Products are exposed to direct sunshine or condensation
   [d] the Products are exposed to high Electrostatic

2. Even under ROHM recommended storage condition, solderability of products out of recommended storage time period may be degraded. It is strongly recommended to confirm solderability before using Products of which storage time is exceeding the recommended storage time period.

3. Store / transport cartons in the correct direction, which is indicated on a carton with a symbol. Otherwise bent leads may occur due to excessive stress applied when dropping of a carton.

4. Use Products within the specified time after opening a humidity barrier bag. Baking is required before using Products of which storage time is exceeding the recommended storage time period.

Precaution for Product Label

A two-dimensional barcode printed on ROHM Products label is for ROHM's internal use only.

Precaution for Disposition

When disposing Products please dispose them properly using an authorized industry waste company.

Precaution for Foreign Exchange and Foreign Trade act

Since concerned goods might be fallen under listed items of export control prescribed by Foreign exchange and Foreign trade act, please consult with ROHM in case of export.

Precaution Regarding Intellectual Property Rights

1. All information and data including but not limited to application example contained in this document is for reference only. ROHM does not warrant that foregoing information or data will not infringe any intellectual property rights or any other rights of any third party regarding such information or data.

2. ROHM shall not have any obligations where the claims, actions or demands arising from the combination of the Products with other articles such as components, circuits, systems or external equipment (including software).

3. No license, expressly or implied, is granted hereby under any intellectual property rights or other rights of ROHM or any third parties with respect to the Products or the information contained in this document. Provided, however, that ROHM will not assert its intellectual property rights or other rights against you or your customers to the extent necessary to manufacture or sell products containing the Products, subject to the terms and conditions herein.

Other Precaution

1. This document may not be reprinted or reproduced, in whole or in part, without prior written consent of ROHM.

2. The Products may not be disassembled, converted, modified, reproduced or otherwise changed without prior written consent of ROHM.

3. In no event shall you use in any way whatsoever the Products and the related technical information contained in the Products or this document for any military purposes, including but not limited to, the development of mass-destruction weapons.

4. The proper names of companies or products described in this document are trademarks or registered trademarks of ROHM, its affiliated companies or third parties.

© 2015 ROHM Co., Ltd. All rights reserved.

General Precaution

1. Before you use our Products, you are requested to carefully read this document and fully understand its contents. ROHM shall not be in any way responsible or liable for failure, malfunction or accident arising from the use of any ROHM's Products against warning, caution or note contained in this document.

2. All information contained in this document is current as of the issuing date and subject to change without any prior notice. Before purchasing or using ROHM's Products, please confirm the latest information with a ROHM sales representative.

3. The information contained in this document is provided on an "as is" basis and ROHM does not warrant that all information contained in this document is accurate and/or error-free. ROHM shall not be in any way responsible or liable for any damages, expenses or losses incurred by you or third parties resulting from inaccuracy or errors of or concerning such information.

© 2015 ROHM Co., Ltd. All rights reserved.

Mouser Electronics

Authorized Distributor

Click to View Pricing, Inventory, Delivery & Lifecycle Information:

ROHM Semiconductor:

BD42530EFJ-CE2 BD42530FP2-CE2 BD42530FPJ-CE2